# Spare part's book

## SUPERMOTARD ENDURO 50

## City Corp 125

04 SERIES

Play with gravity

SHERCO Motorcycles

# Index / Index / Índice


1 Cadre / Frame / Chasis

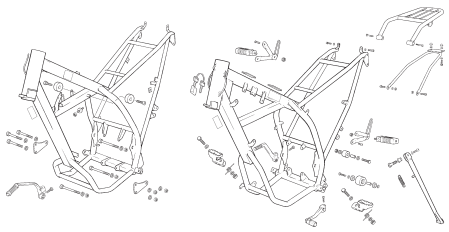

pag. 1 - 4

2 Fourche / Fork / Horquilla

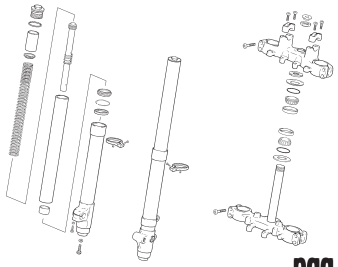

pag. 5 - 6

3 Amortisseur / Rear Shock / Amortiguador

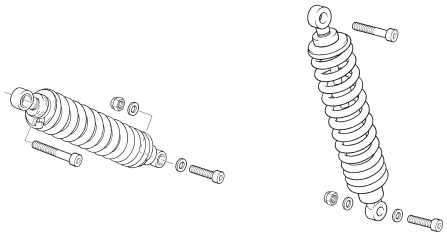

pag. 7 - 8

4 Bras oscillant / Swingarm / Basculante

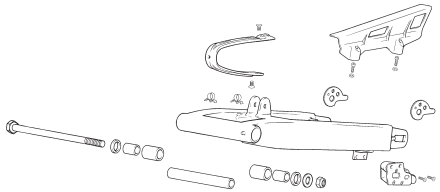

pag. 9 - 10

5 Frein avant / Front brake / Freno delantero

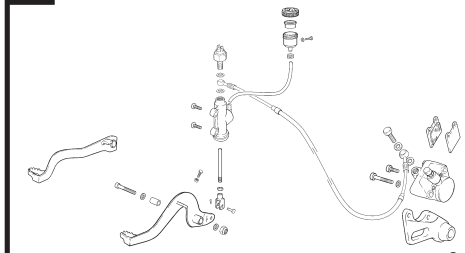

pag. 11 - 12

6 Frein arriere / Read brake / Freno trasero

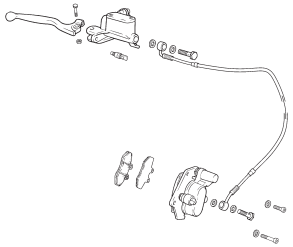

pag. 13 - 16

7 Pot echappement / Exhaust pipe / Escape

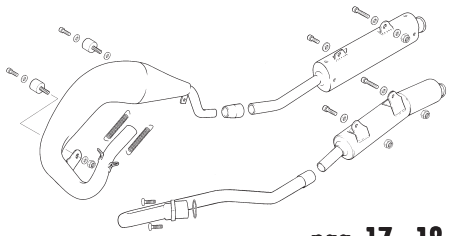

pag. 17 - 18

8 Reservoir essence / Fuel tank / Depósito gasolina

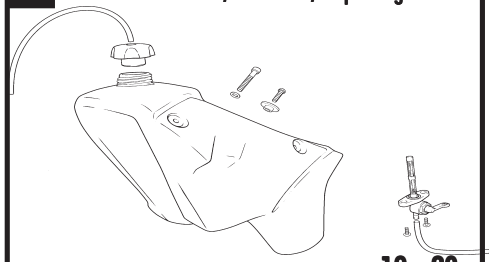

pag. 19 - 20

9 Radiateur / Radiator / Radiador

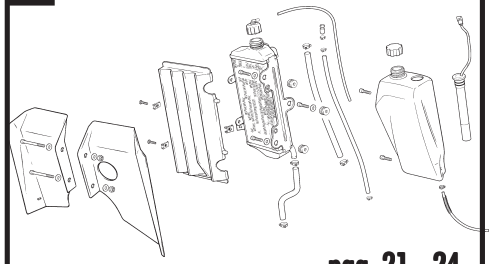

pag. 21 - 24

10 Filtre / Filter / Filtro

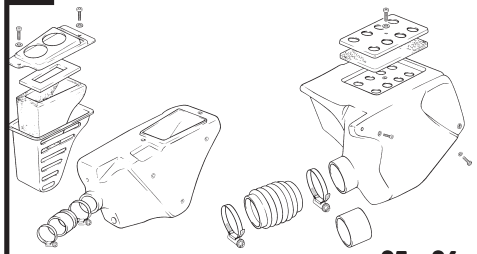

pag. 25 - 26

11 Faisceau electrique / Electric cable / Instalación eléctrica - 50 c.c.c

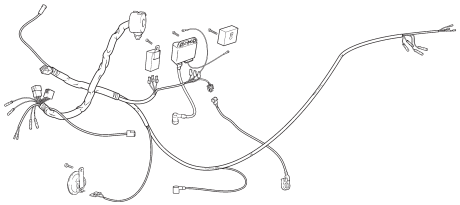

pag. 27 - 28

12 Faisceau electrique / Electric cable / Instalación eléctrica - 125 c.c.c. 6 polos

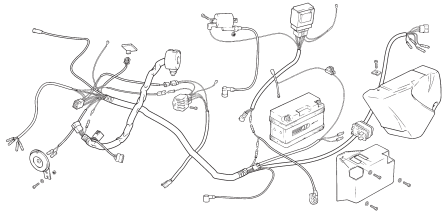

pag. 29 - 30

# Index / Index / Índice


13 Faisceau electrique / Electric cable / Instalación eléctrica - 125 c.c.c. 8 polos

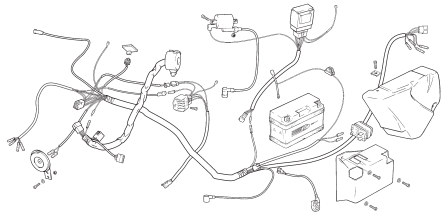

pag. 31- 32

14 Phare / Headlight / Faro

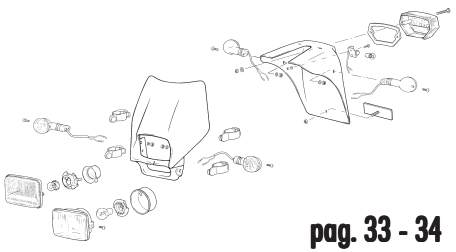

pag. 33 - 34

15 Tableau de bord / Speedmeter table / Tablier

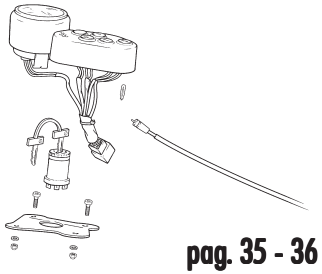

pag. 35 - 36

16 Roue avant / Front wheel / Rueda dalentera

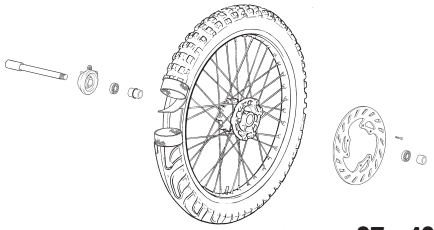

pag. 37 - 40

17 Roue arriere / Rear wheel / Rueda trasera

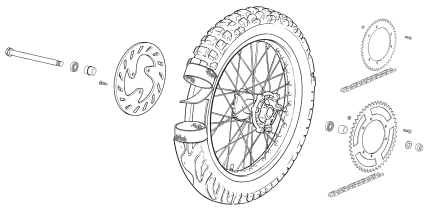

pag. 41 - 44

18 Guidon / Handlebar / Manillar

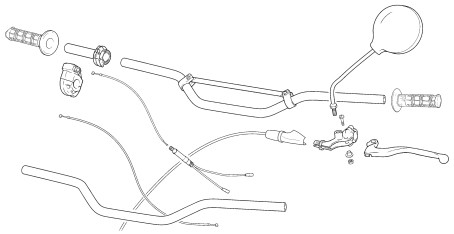

pag. 45 - 46

19 Plastiques / Plastics / Plásticos

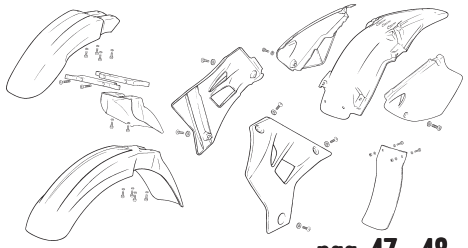

pag. 47 - 48

20 Adhesif / Sticker / Adhesivo

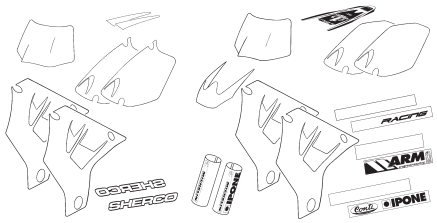


pag. 49 - 52

21 Selle / Seat / Sillín

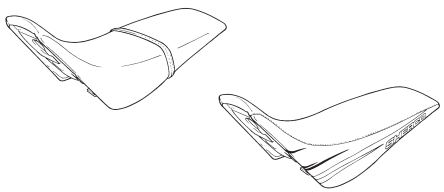

pag. 53 - 54

22 Moteur / Engine / Motor 50

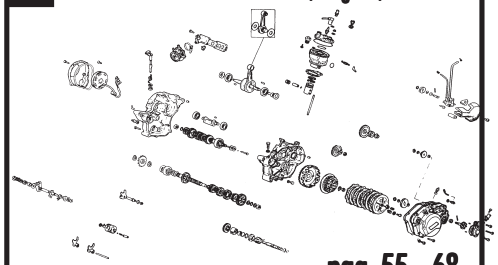

pag. 55 - 68

23 Cylindre / Cylinder / Cilindro

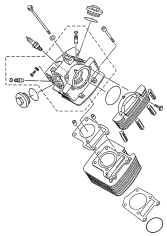

pag. 69 - 70

24 Villebrequin assemble / Crankshaft assy / Cigüeñal biela

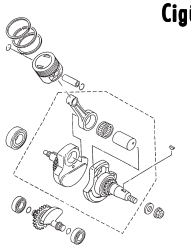

pag. 71 - 72

# Index / Index / Índice


**25** Soupape admission / Valve intake / Válvula admisión

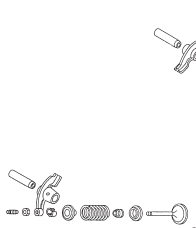

pag. 73 - 74

**26** Syteme distribution / Distribution system / Sistema distribución

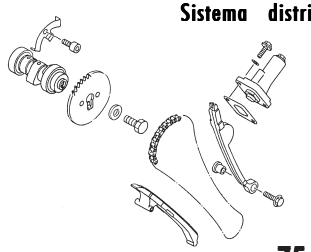

pag. 75 - 76

**27** Carter centraux / Central crankcase / Carter central

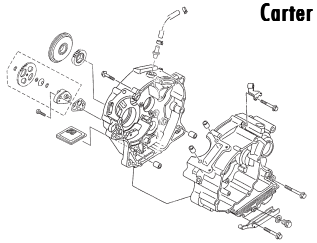

pag. 77 - 78

**28** Carburateur / Carburetor / Carburador

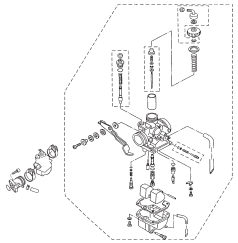

pag. 79 - 82

**29** Carter lateraux / Lateral cranckase / Carter lateral

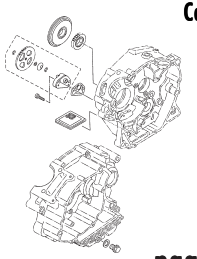

pag. 83 - 84

**30** Systeme demarreur / Start system / Sistema arranque

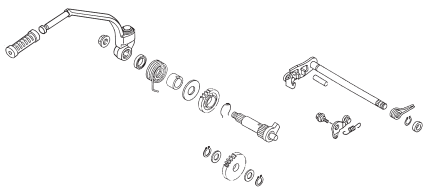

pag. 85 - 86

**31** Demarreur electrique / Kickstarter / Arranque eléctrico

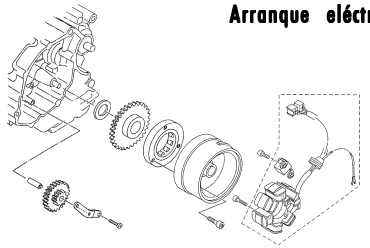

pag. 87 - 88

**32** Embrayage / Clutch / Embrague

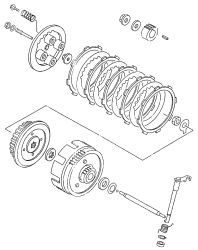

pag. 89 - 92

**33** Transmission / Transmission / Transmisión

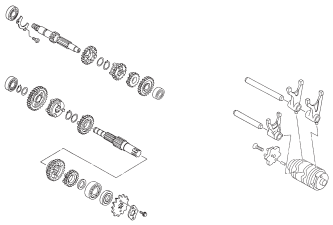

pag. 93 - 96

**34** Ensemble allumage / Ignition system / Sistema de encendido

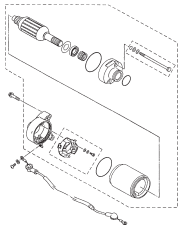

pag. 97- 98

# Cadre / Frame / Chasis

## 125 c.c.c.

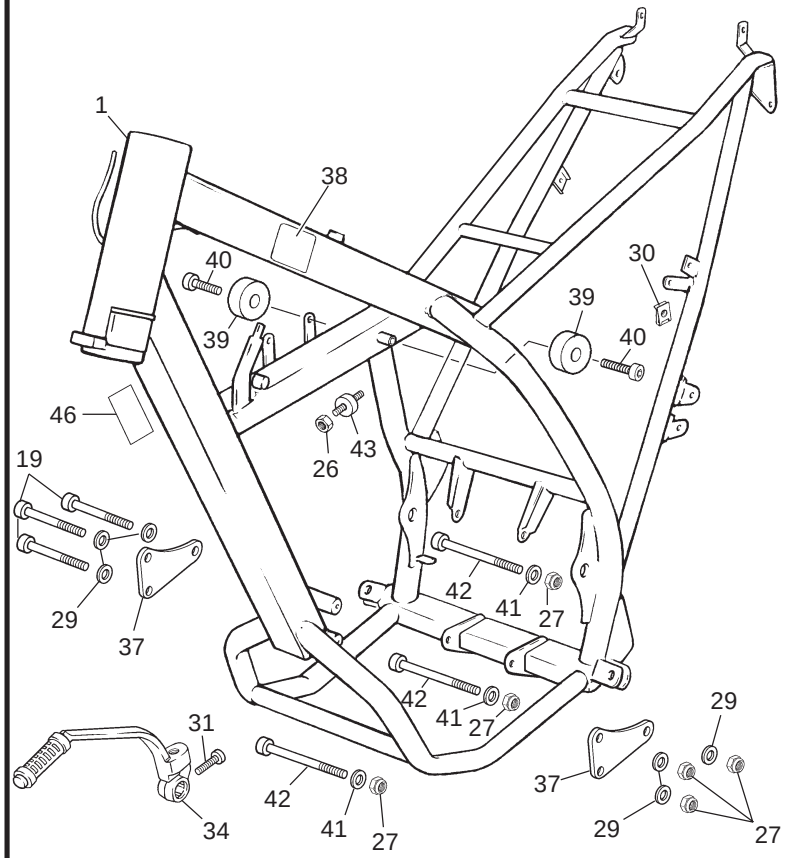


## 50 c.c.c.

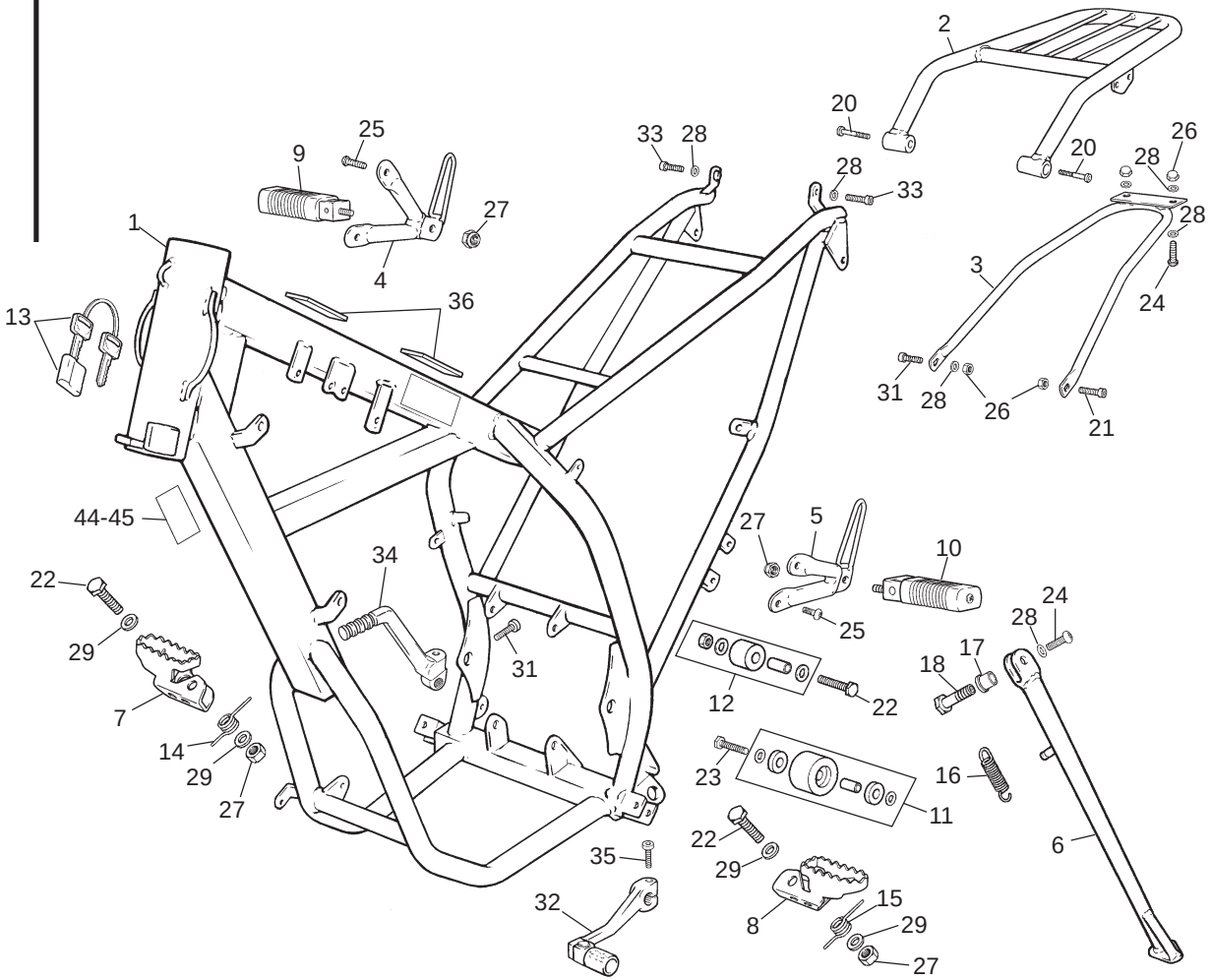

1

## Cadre / Frame / Chasis

| POS. | 50 SM | 50 END | 125 SM | 125 END | FRANÇAIS | ENGLISH | ESPAÑOL |
|---|---|---|---|---|---|---|---|
| 1 | H171 | H171 | H170 | H170 | CADRE | FRAME | CHASIS |
| 2 | H190 | H190 | -- | -- | PORTE PAQUET | LUGGAGE RACK | PORTA PAQUETES |
| 3 | H184 | H184 | H184 | H184 | RENFORT GB | REAR FENDER BRACE | REFUERZO GUARDABARROS TRASERO |
| 4 | H181 | H181 | H181 | H181 | FIXATION CALE PIED DROIT | RIGHT FOOTREST SUPPORT | SOPORTE ESTRIBO DERECHO |
| 5 | H182 | H182 | H182 | H182 | FIXATION CALE PIED GAUCHE | LEFT FOOTREST SUPPORT | SOPORTE ESTRIBO IZQUIERDO |
| 6 | H178 | H178 | H178 | H178 | BEQUILLE | STAND | CABALLETE |
| 7 | H175 | H175 | H175 | H175 | CALE PIED DROIT | RIGHT FOOTREST | ESTRIBO DERECHO |
| 8 | H174 | H174 | H174 | H174 | CALE PIED GAUCHE | LEFT FOOTREST | ESTRIBO IZQUIERDO |
| 9 | H183 | H183 | H183 | H183 | CALE PIED PASSAGER DROIT | RIGHT PASSENGER FOOTREST | ESTRIBO PASAJERO DERECHO |
| 10 | H186 | H186 | H186 | H186 | CALE PIED PASSAGER GAUCHE | LEFT PASSENGER FOOTREST | ESTRIBO PASAJERO IZQUIERDO |
| 11 | H066 | H066 | H066 | H066 | ROULETTE INFERIEURE GROSSE | BOTTOM LARGE ROLLER | RODILLO INFERIOR GRANDE |
| 12 | H069 | H069 | H069 | H069 | ROULETTE SUPERIEURE PETITE | TOP SMALL ROLLER | RODILLO SUPERIOR PEQUEÑO |
| 13 | H173 | H173 | H173 | H173 | ANTIVOL DIRECTION | STEERING LOCK | ANTIROBO DIRECCION |
| 14 | H201 | H201 | H201 | H201 | RESSORT CALE PIED DROIT | RIGHT FOOTREST SPRING | MUELLE ESTRIBO DERECHO |
| 15 | H202 | H202 | H202 | H202 | RESSORT CALE PIED GAUCHE | RIGHT FOOTREST SPRING | MUELLE ESTRIBO IZQUIERDO |
| 16 | H203 | H203 | H203 | H203 | RESSORT DE BEQUILLE | STAND SPRING | MUELLE CABALLETE |
| 17 | H112 | H112 | H112 | H112 | ENTRETOISE DE BEQUILLE | STAND BUSHING | CASQUILLO CABALLETE |
| 18 | H111 | H111 | H111 | H111 | VIS DE BEQUILLE | STAND SCREW | TORNILLO CABALLETE |
| 19 | M266 | M266 | M266 | M266 | VIS CHC M8*80 | SCREW CHC M8*80 | TORNILLO M8*80 DIN 912 |
| 20 | M256 | M256 | -- | -- | VIS CHC M6*45 | SCREW CHC M6*45 | TORNILLO M6*45 DIN 912 |
| 21 | M251 | M251 | M251 | M251 | VIS CHC M6*16 | SCREW CHC M6*16 | TORNILLO M6*16 DIN 912 |
| 22 | C422 | C422 | C422 | C422 | VIS HEXA M8*45 | SCREW M8*45 | TORNILLO M8*45 DIN 933 |
| 23 | C421 | C421 | C421 | C421 | VIS HEXA M8*40 | SCREW M8*40 | TORNILLO M8*40 DIN 933 |
| 24 | M279 | M279 | M279 | M279 | VIS BHC M6*20 | SCREW BHC M6*20 | TORNILLO M6*20 ULS |

# Cadre / Frame / Chasis

## 125 c.c.c.

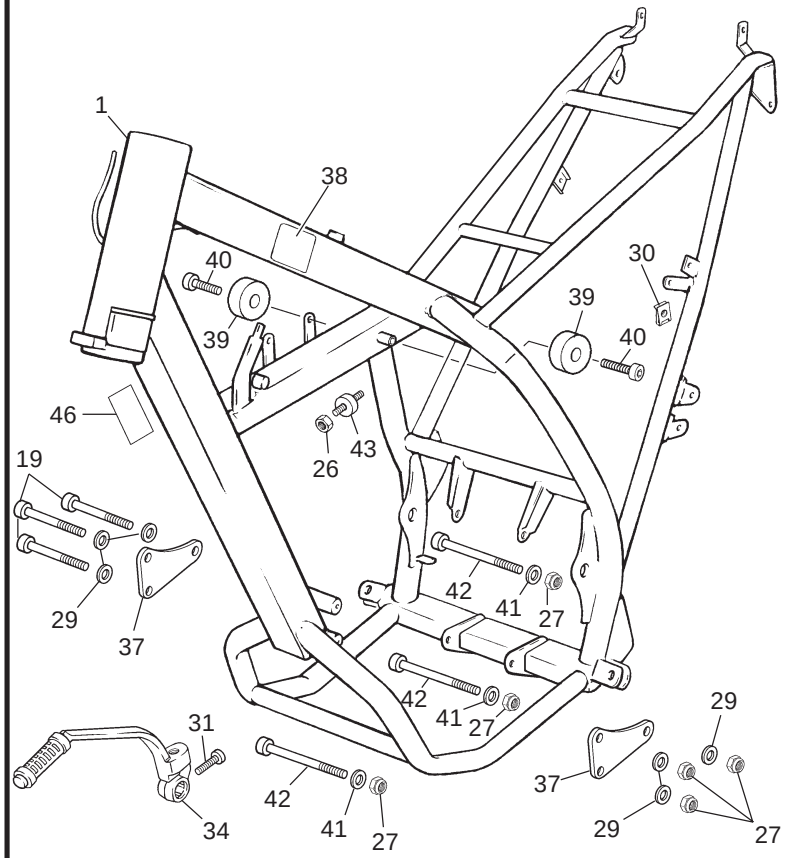


## 50 c.c.c.

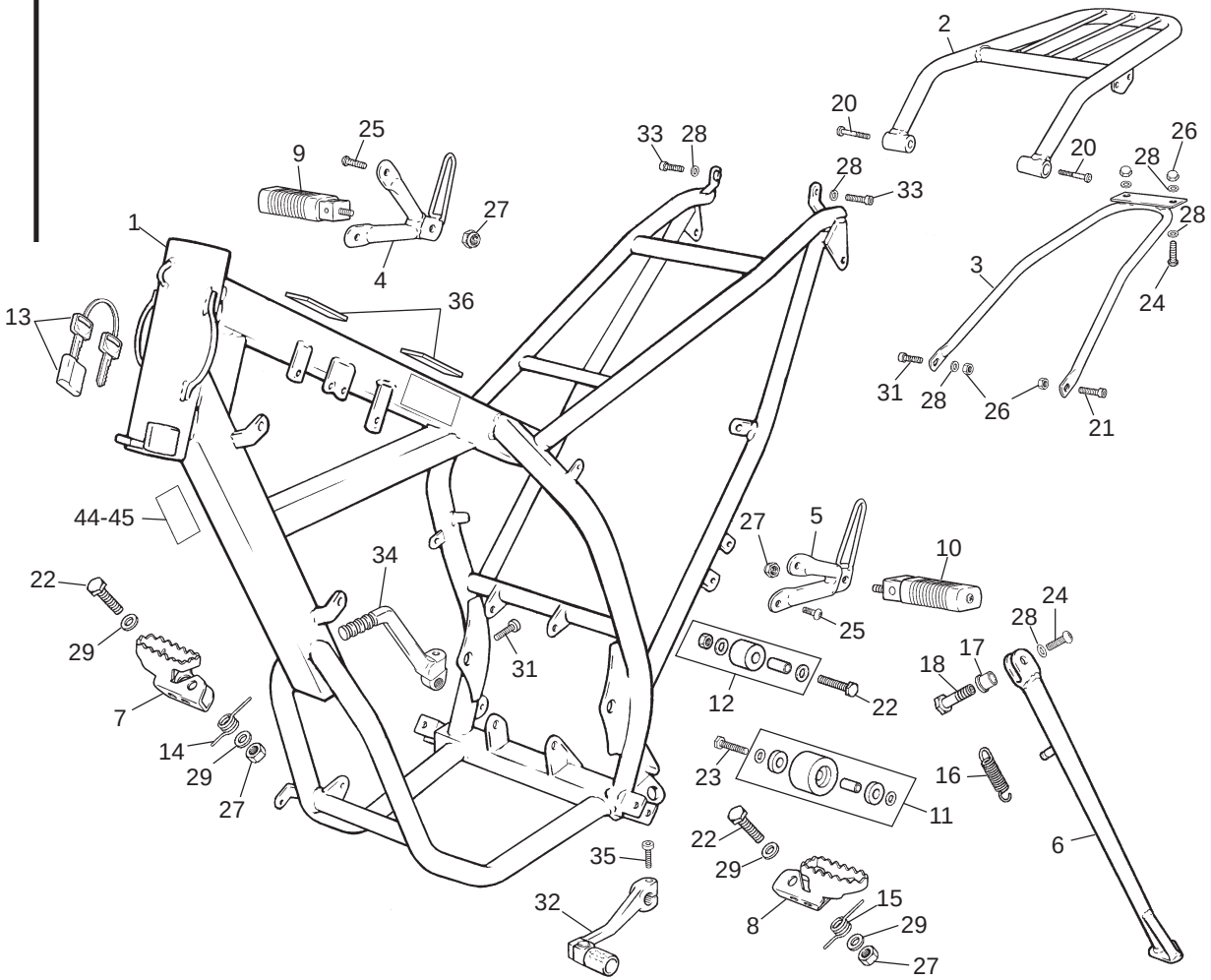

1

## Cadre / Frame / Chasis

| POS. | 50 SM | 50 END | 125 SM | 125 END | FRANÇAIS | ENGLISH | ESPAÑOL |
|---|---|---|---|---|---|---|---|
| 25 | M283 | M283 | M283 | M283 | VIS BHC M6*16 | SCREW BHC M6*16 | TORNILLO M6*16 ULS |
| 26 | M306 | M306 | M306 | M306 | ECROU NYLSTOP M6 | NUT NYLSTOP M6 | TUERCA NYLSTOP M6 |
| 27 | M305 | M305 | M305 | M305 | ECROU NYLSTOP M8 | NUT NYLSTOP M8 | TUERCA NYLSTOP M8 |
| 28 | C427 | C427 | C427 | C427 | RONDELLE M6*15 | WASHER M6*15 | ARANDELA M6*15 |
| 29 | C430 | C430 | C430 | C430 | RONDELLE M8 | WASHER M8 | ARANDELA M8 |
| 30 | M308 | M308 | M308 | M308 | ECROU CLIP M6 | NUT CLIP M6 | TUERCA CLIP M6 |
| 31 | C410 | C410 | C410 | C410 | VIS CHC M6*25 | SCREW CHC M6*25 | TORNILLO M6*25 DIN 912 |
| 32 | H209 | H209 | H318 | H318 | SELECTEUR ALU. | GEAR PEDAL ALUM. | PEDAL DE CAMBIO ALUMINIO |
| 33 | M279 | M279 | M279 | M279 | VIS BHC M6*20 | SCREW BHC M6*20 | TORNILLO M6*20 ULS |
| 34 | H212 | H212 | Y665 | Y665 | KICK ALU | KICKSTART PEDAL ALUM. | PEDAL DE ARRANQUE ALUM. |
| 35 | M252 | M252 | M252 | M252 | VIS CHC M6*20 | SCREW CHC M6*20 | TORNILLO M6*20 DIN 912 |
| 36 | H060 | H060 | -- | -- | SCOTCH MOUSSE RLX 5 X 15 X 20 ML | FUEL TANK/FRAME RUBBER STICKER | ADHESIVO ESPUMA DEPOSITO |
| 37 | -- | -- | H338 | H338 | PATTE SUPPORT MOTEUR 125 CITY C. | ENGINE HOLDER 125 CITY CORP | SOPORTE MOTOR 125 CITY CORP |
| 38 | -- | -- | H320 | H320 | PLAQUE ADH. ANTI MANIPULATION 125 | STICKER ANTI MANIPULATION | PLACA ADH. ANTI MANIPULACION 125 |
| 39 | -- | -- | H051 | H051 | BUTEE RESERVOIR 125 | FUEL TANK STOPPER 125 | TOPE DEPOSITO 125 |
| 40 | -- | -- | C413 | C413 | VIS CHC M8*16 | SCREW CHC M8*16 | TORNILLO M8*16 DIN 912 |
| 41 | -- | -- | C430 | C430 | RONDELLE M8*16 | WASHER M8*16 | ARANDELA M8*16 |
| 42 | -- | -- | C412 | C412 | VIS CHC M8*100 | SCREW CHC M8*100 | TORNILLO M8*100 DIN 912 |
| 43 | -- | -- | H337 | H337 | SILENT BLOCK FILTRE AIR 125 CITY CORP | AIR BOX RUBBER BLOCK 125 CITY CORP | SILENTBLOCK CAJA FILTRO 125 |
| 44 | H188 | H188 | -- | -- | PLAQUE ADHESIVE 50 | PLAQUE ADHESIVE 50 | PLACA ADHESIVO 50 |
| 45 | H189 | H189 | -- | -- | PLAQUE ADHESIVE 50 E1 | PLAQUE ADHESIVE 50 E1 | PLACA ADHESIVO 50 E1 |
| 46 | -- | -- | H187 | H187 | PLAQUE ADHESIVE 125 | PLAQUE ADHESIVE 125 | PLACA ADHESIVO 125 |

# Fourche / Fork / Horquilla

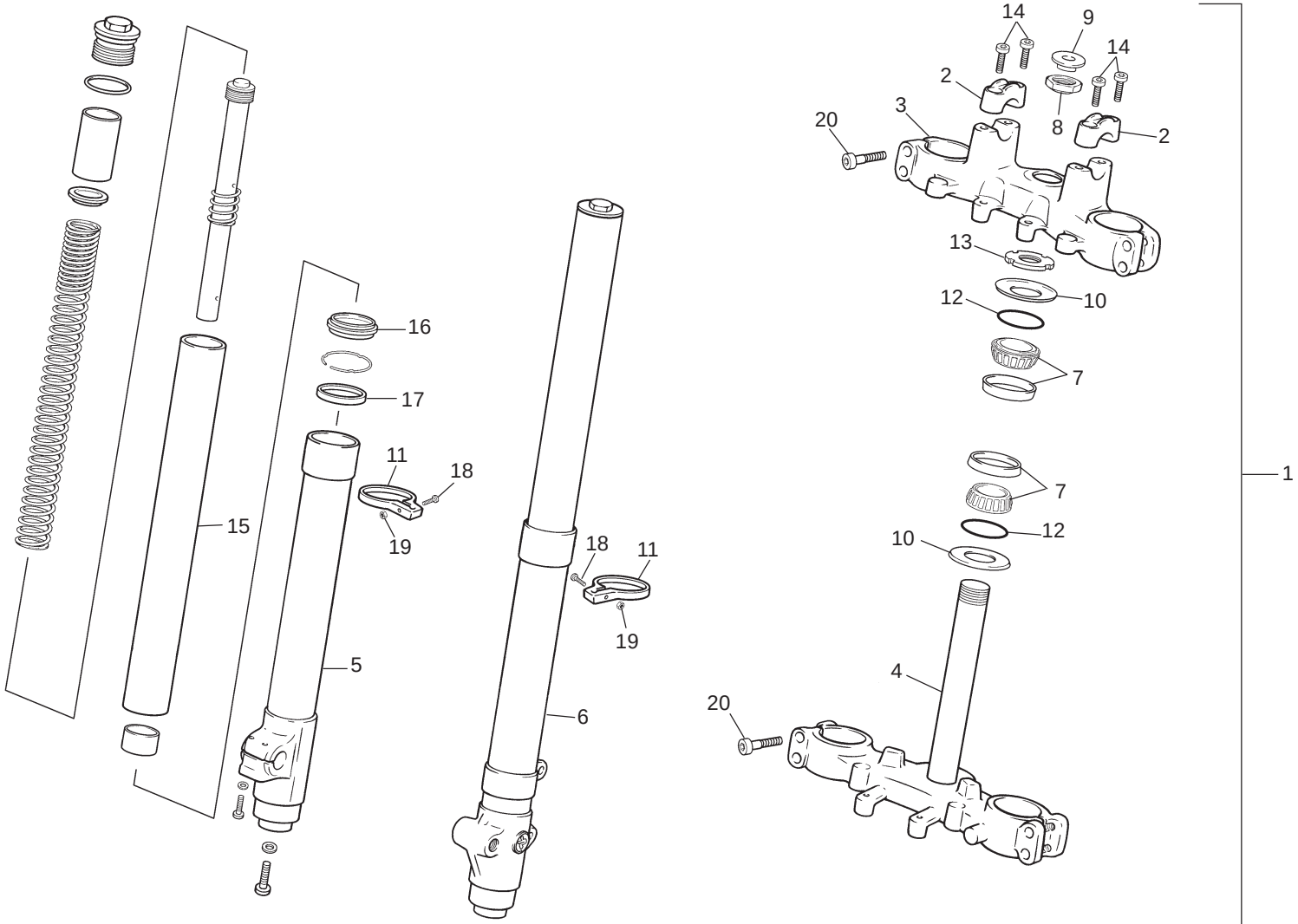

2

# Fourche / Fork / Horquilla

| POS. | 50 SM | 50 END | 125 SM | 125 END | FRANÇAIS | ENGLISH | ESPAÑOL |
|---|---|---|---|---|---|---|---|
| 1 | H013 | H013 | H012 | H012 | FOURCHE PAIOLI 41 COMPLETE | FRONT SUSPENSION PAIOLI 41 FOR. | SUSPENSION DEL. PAIOLI 41 MM COMP. |
| 2 | R340 | R340 | R340 | R340 | BRIDE GUIDON SUPERIEURE | TOP HANDLEBAR CLAMP | BRIDA SUPERIOR MANILLAR |
| 3 | R341 | R341 | R341 | R341 | T SUPERIEUR | UPPER PLATE | PLATINA SUPERIOR |
| 4 | R342 | R342 | R342 | R342 | T INFERIEUR | BOTTOM PLATE | PLATINA INFERIOR CON EJE |
| 5 | R343 | R343 | R343 | R343 | BRAS DROIT COMPLET | FORK LEG RIGHT | BOTELLA DERECHA |
| 6 | R344 | R344 | R344 | R344 | BRAS GAUCHE COMPLET | FORK LEG LEFT | BOTELLA IZQUIERDA |
| 7 | H006 | H006 | H006 | H006 | KIT ROULEMENT | KIT STEERING BEARING | RODAMIENTO DIRECCION |
| 8 | R345 | R345 | R345 | R345 | ECROU M25 | NUT M25 | TUERCA M25 |
| 9 | R346 | R346 | R346 | R346 | BOUCHON DE COLONNE | PLUG | TAPON |
| 10 | R347 | R347 | R347 | R347 | ECROU M25 A ERGOTS | STEERING WASHER | TUERCA DIRECCIÓN |
| 11 | H067 | H067 | H067 | H067 | FIXATION CABLE ET DURITE | TUBE AND CABLE CLAMP | FIJACION CABLE Y TUBO |
| 12 | H008 | H008 | H008 | H008 | JOINT TORIQUE | O-RING | TÓRICA |
| 13 | H176 | H176 | H176 | H176 | RONDELLE COLONNE | STEERING LOCKNUT | ARANDELA APOYO |
| 14 | C414 | C414 | C414 | C414 | VIS CHC M8*35 | SCREW CHC M8*35 | TORNILLO M8*35 DIN 912 |
| 15 | R386 | R386 | R386 | R386 | TUBE | TUBE | TUBO |
| 16 | R348 | R348 | R348 | R348 | PARE POUSSIERE | O-RING | GUARDA POLVO HORQUILLA |
| 17 | R349 | R349 | R349 | R349 | JT SPI | SEAL FORK | RETEN SUSPENSION |
| 18 | M250 | M250 | M250 | M250 | VIS CHC M5*16 | SCREW CHC M5*16 | TORNILLO M5*16 DIN 912 |
| 19 | M355 | M355 | M355 | M355 | ECROU NYLSTOP M5 | NUT NYLSTOP M5 | TUERCA NYLSTOP M5 |
| 20 | M264 | M264 | M264 | M264 | VIS M8*a45 | SCREW M8*45 | TORNILLO M8*45 DIN 912 |

# Amortisseur / Rear Shock / Amortiguador

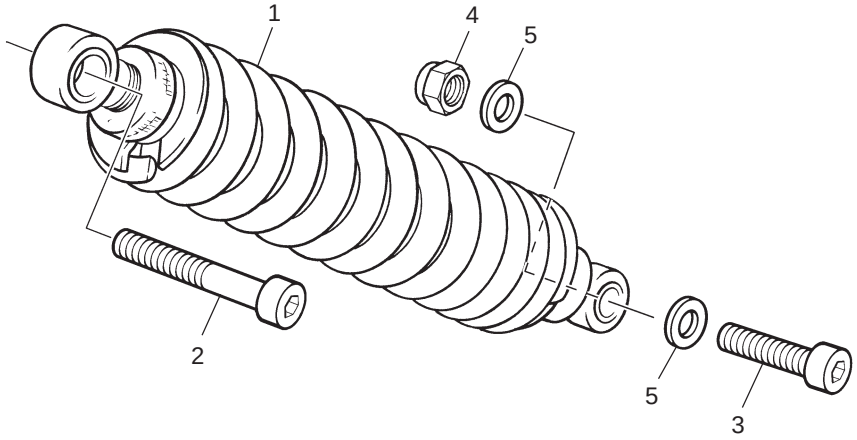


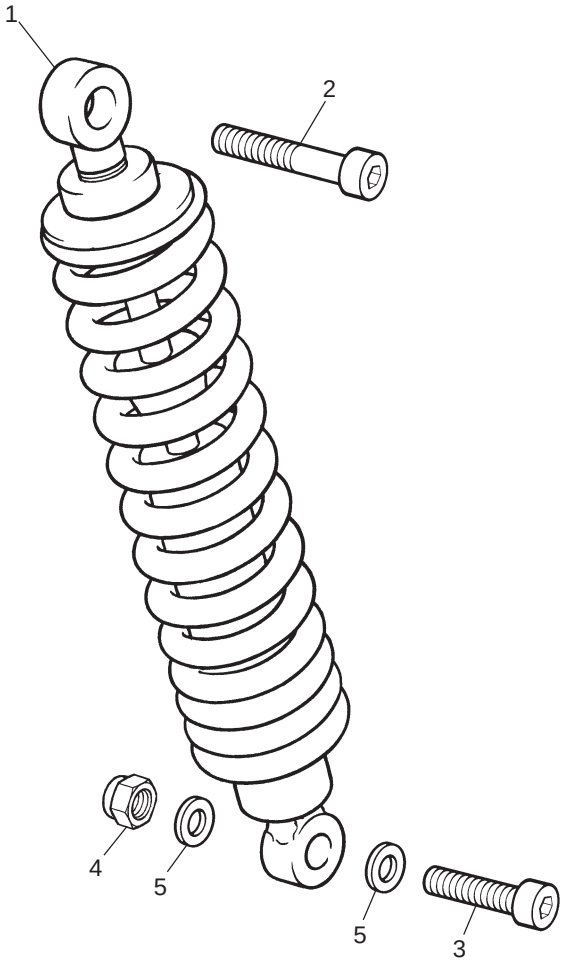

3

# Amortisseur / Rear Shock / Amortiguador

| POS. | 50 SM | 50 END | 125 SM | 125 END | FRANÇAIS | ENGLISH | ESPAÑOL |
|---|---|---|---|---|---|---|---|
| 1 | H011 | H011 | H011 | H011 | AMORTISSEUR | REAR SHOCK | AMORTIGUADOR |
| 2 | M259 | M259 | M259 | M259 | VIS CHC M10*50 | SCREW CHC M10*50 | TORNILLO M10*50 DIN 912 |
| 3 | C407 | C407 | C407 | C407 | VIS CHC M10*50 | SCREW CHC M10*50 | TORNILLO M10*50 DIN 912 |
| 4 | M304 | M3A4 | M304 | M304 | ECROU MYLSTOP M10 | NUT NYLSTOP | TURECA NYLSTOP M10 |
| 5 | C424 | C424 | C424 | C424 | RONDELLE M10 | WASHER M10 | ARANDELA M10 |

# Bras oscillant / Swingarm / Basculante

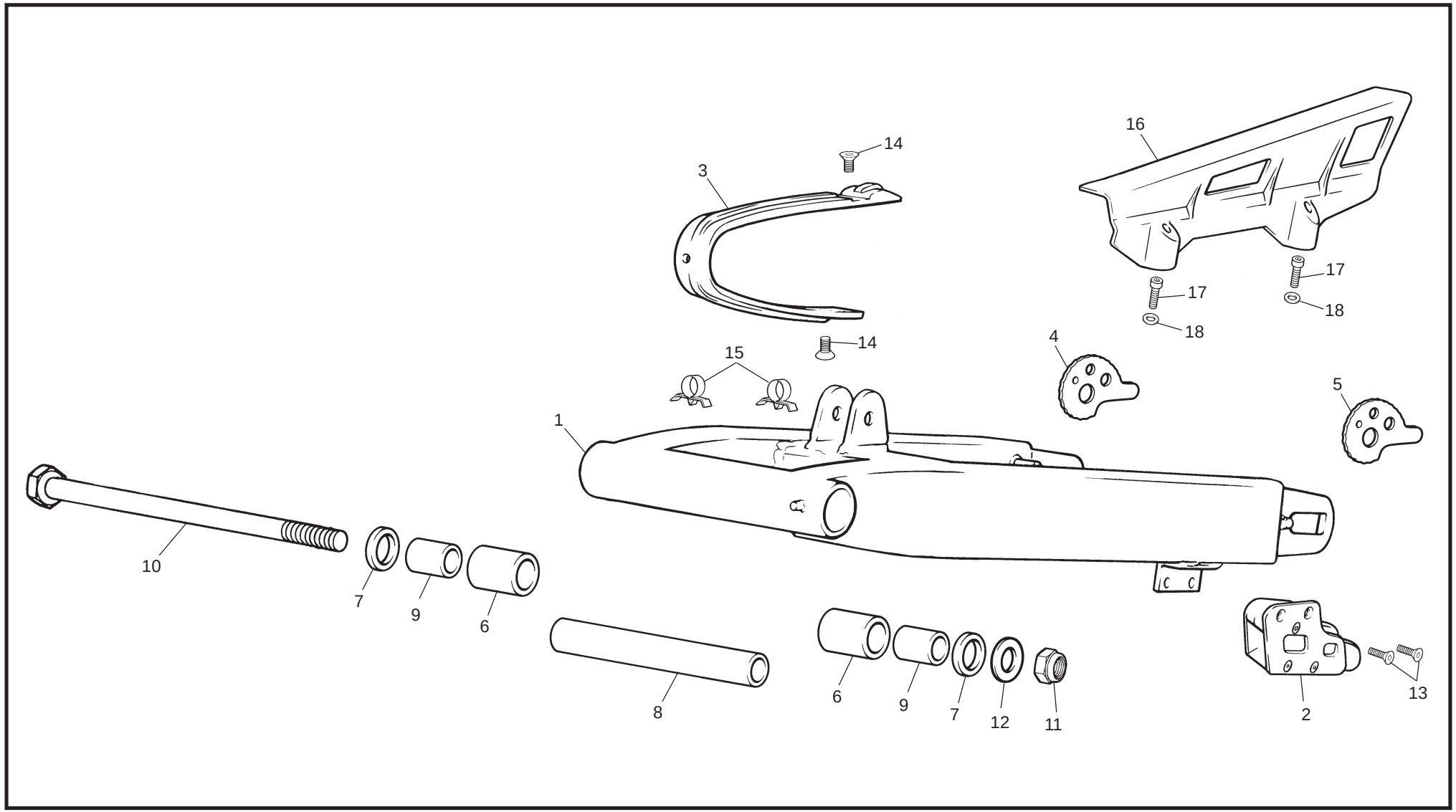

4

# Bras oscillant / Swingarm / Basculante

| POS. | 50 SM | 50 END | 125 SM | 125 END | FRANÇAIS | ENGLISH | ESPAÑOL |
|---|---|---|---|---|---|---|---|
| 1 | H169 | H169 | H168 | H168 | BRAS OSCILLANT | SWINGARM | BASCULANTE |
| 2 | H068 | H068 | H068 | H068 | GUIDE CHAINE | CHAIN GUIDE | GUÍA CADENA |
| 3 | H065 | H065 | H065 | H065 | PATIN CHAINE | CHAIN SLIDE | PATIN CADENA |
| 4 | H185 | H185 | H185 | H185 | ESCARGOT TENDEUR DROIT | CHAIN TENSIONER RIGHT | EXCENTRICA CADENA DERECHA |
| 5 | H180 | H180 | H180 | H180 | ESCARGOT TENDEUR GAUCHE | CHAIN TENSIONER LEFT | EXCENTRICA CADENA IZQUIERDA |
| 6 | H007 | H007 | H007 | H007 | ROULEMENT AIGUILLE | BEARING | COJINETE AGUJAS HK2220 |
| 7 | H009 | H009 | H009 | H009 | JT SPI | SWINGARM SEAL | RETEN CIGÜEÑAL |
| 8 | H125 | H125 | H124 | H124 | ENTRETOISE BRAS | SPACER SUSPENSION | SEPARADOR EJE BASCULANTE |
| 9 | H120 | H120 | H120 | H120 | ENTRETOISE TRAITÉE BRAS OSCILANT. | HARDENED SPACER FOR SWINGARM | CASQUILLO TRATADO BASCULANTE |
| 10 | H127 | H127 | H126 | H126 | AXE BRAS OSCILLANT | SWINGARM AXLE | EJE BASCULANTE |
| 11 | C416 | C416 | C416 | C416 | ECROU NYLSTOP M14 | NUT NYLSTOP M14 | TUERCA NYLSTOP M14 |
| 12 | C425 | C425 | C425 | C425 | RONDELLE M14 | WASHER M14 | ARANDELA M14 |
| 13 | C432 | C432 | C432 | C432 | VIS FHC M6*16 | SCREW FHC M6*16 | TORNILLO M6*16 DIN 7991 |
| 14 | C433 | C433 | C433 | C433 | VIS FHC M8*10 | SCREW FHC M8*10 | TORNILLO M8*10 DIN 7991 |
| 15 | H273 | H273 | H273 | H273 | CLIP DURITE DE FREIN | BRAKE HOSE CLIP | CLIP TUBO FRENO |
| 16 | -- | -- | H319 | H319 | CARTER DE CHAINE 125 CITY CORP | CHAIN COVER 125 CITY CORP | PROTECTOR CADENA 125 CITY CORP |
| 17 | -- | -- | M251 | M251 | VIS CHC M6*12 | SCREW CHC M6*16 | TORNILLO M6*16 DIN 912 |
| 18 | -- | -- | C427 | C427 | RONDELLE M6*15 | WASHER M6*15 | ARANDELA M6*15 |

# Frein avant / Front brake / Freno delantero

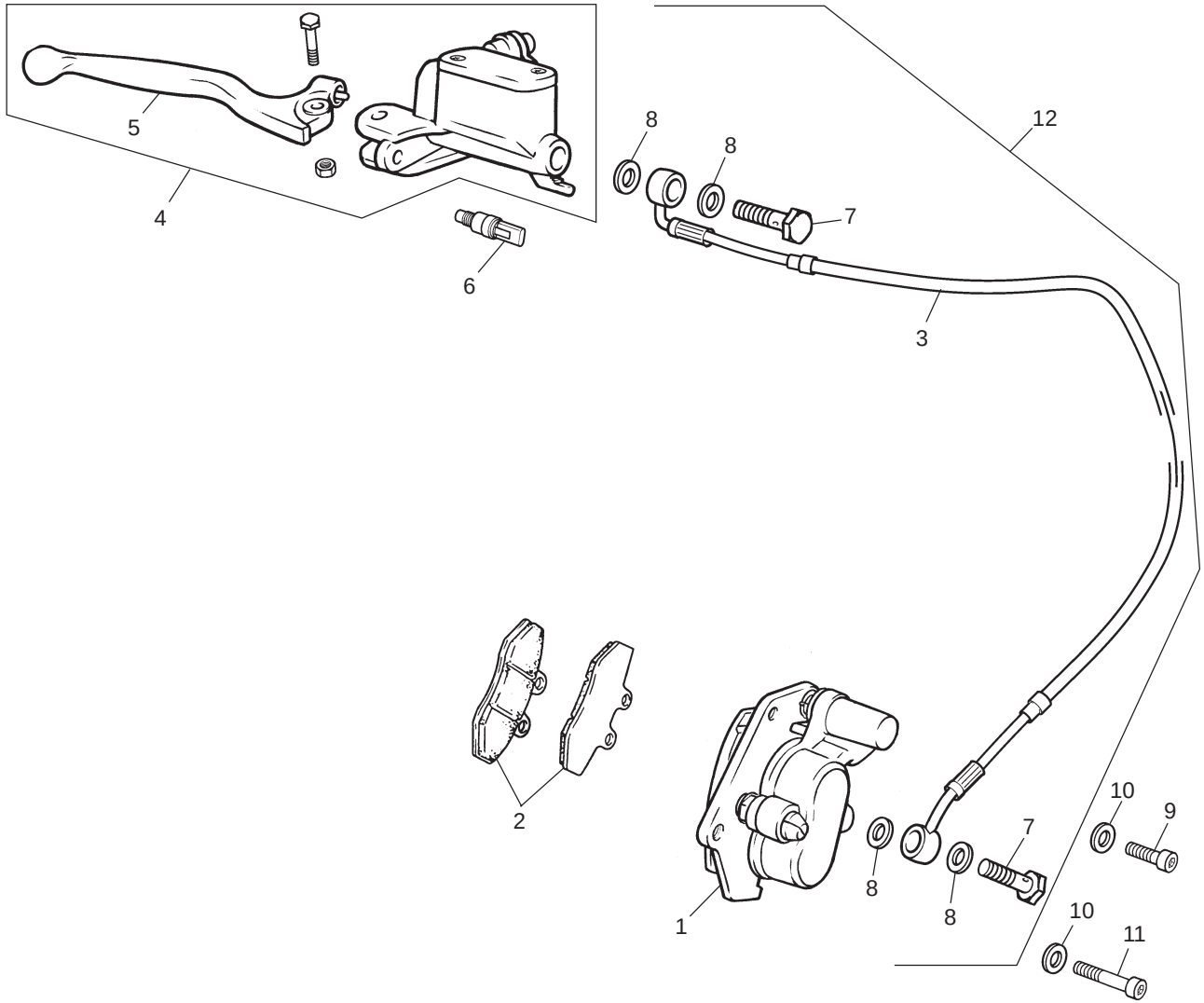

5

# Frein avant / Front brake / Freno delantero

| POS. | 50 SM | 50 END | 125 SM | 125 END | FRANÇAIS | ENGLISH | ESPAÑOL |
|---|---|---|---|---|---|---|---|
| 1 | R350 | R350 | R350 | R350 | FREIN AV. COMPLET PURGE HRD | FRONT CALIPER ASSY | PINZA FRENO DELANTERO |
| 2 | R351 | R351 | R351 | R351 | PLAQUETTE FREIN | PAD BRAKE | JUEGO PASTILLAS FRENO |
| 3 | R352 | R352 | R352 | R352 | FLEXIBLE DE FREIN | BRAKE HOSE | LATIGUILLO FRENO DELANTERO |
| 4 | R353 | R353 | R353 | R353 | MAITRE CYLINDRE | FRONT MASTER CYLINDER ASSY | BOMBA FRENO DELANTERO |
| 5 | R338 | R338 | R338 | R338 | LEVIER FREIN | FRONT BRAKE LEVER | MANETA FRENO |
| 6 | R354 | R354 | R354 | R354 | CONTACTEUR FREIN AV | FRONT BRAKE LIGHT SWITCH | INTERRUPTOR FRENO DELANTERO |
| 7 | 5059 | 5059 | 5059 | 5059 | VIS DE RACCORD | BANJO SCREW | TORNILLO RACCORD ULS |
| 8 | R074 | R074 | R074 | R074 | JOINT | BANJO SEAL | ARANDELA BANJO |
| 9 | C414 | C414 | C414 | C414 | VIS CHC M8*35 | SCREW CHC M8*35 | TORNILLO M8*35 DIN 912 |
| 10 | C430 | C430 | C430 | C430 | RONDELLE M8*16 | WASHER M8*16 | ARANDELA M8*16 |
| 11 | C406 | C406 | C406 | C406 | VIS CHC M8*50 | SCREW CHC M8*50 | TORNILLO M8*50 DIN 912 |
| 12 | H207 | H207 | H207 | H207 | FREIN AV. COMPLET PURGE HRD | FRONT BRAKE SYSTEM COMPLETE HRD | FRENO DEL COMPLETO SANG. HRD |

# Frein arriere / Read brake / Freno trasero

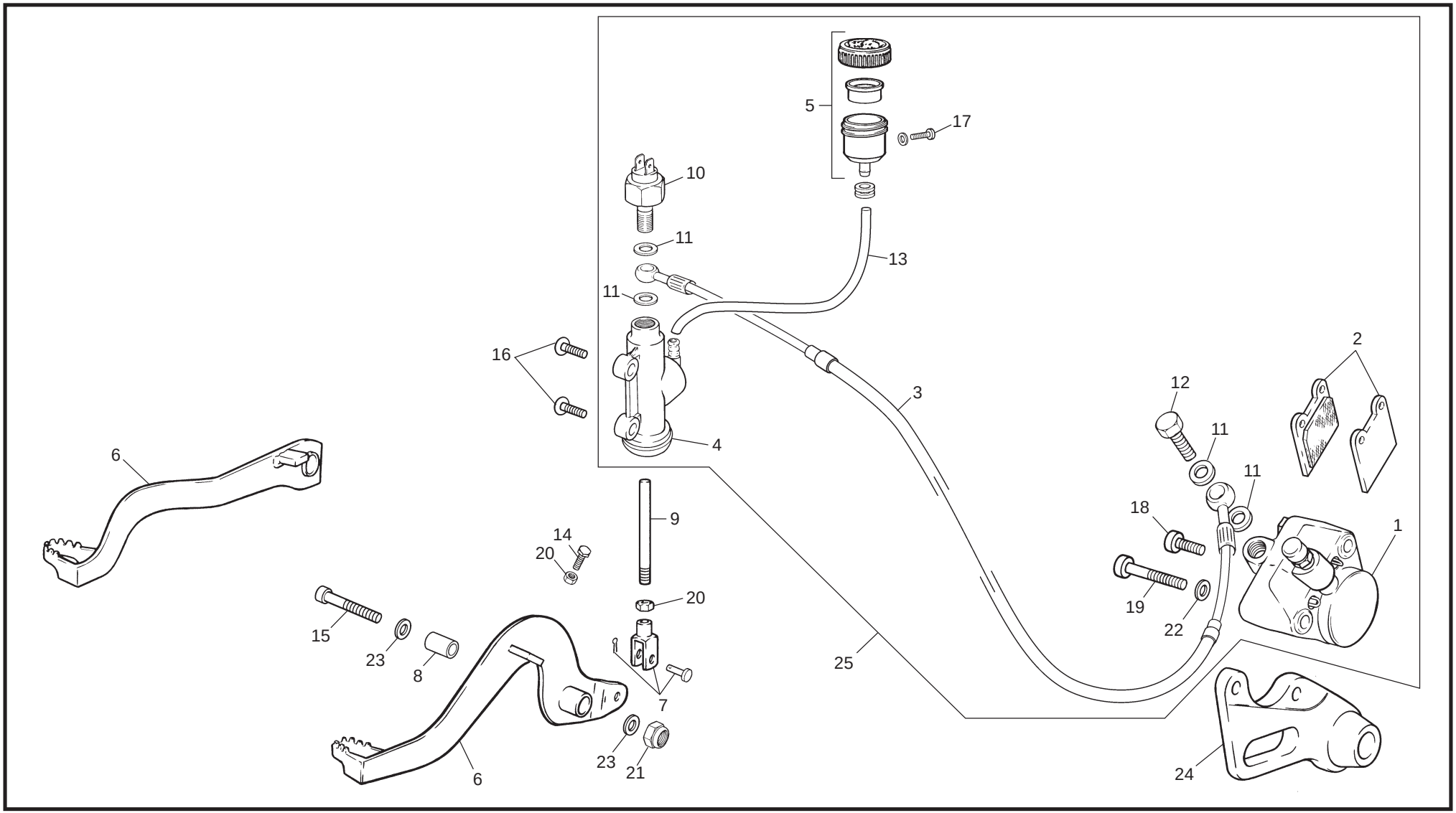

6

# Frein arriere / Read brake / Freno trasero

| POS. | 50 SM | 50 END | 125 SM | 125 END | FRANÇAIS | ENGLISH | ESPAÑOL |
|---|---|---|---|---|---|---|---|
| 1 | R355 | R355 | R355 | R355 | ETRIER FREIN ARRIERE | REAR BRAKE UNIT | PINZA FRENO TRASERO |
| 2 | R051 | R051 | R051 | R051 | PLAQUETTE FREIN | PAD BRAKE | JUEGO PASTILLAS FRENO |
| 3 | R356 | R356 | R356 | R356 | FLEXIBLE FREIN | REAR BRAKE HOSE | LATIGUILLO FRENO TRASERO |
| 4 | R357 | R357 | R357 | R357 | MAITRE CYLINDRE | REAR MASTER CYLINDER | BOMBA FRENO TRASERO |
| 5 | R066 | R066 | R066 | R066 | RESERVOIR LIQUIDE FREIN | REAR BRAKE RESERVOIR | DEPÓSITO LIQUIDO FRENO |
| 6 | H196 | H196 | H317 | H317 | PEDALE FREIN ARR. | REAR BRAKE PEDAL | PEDAL DE FRENO TRASERO |
| 7 | H122 | H122 | H122 | H122 | CHAPE PEDALE FREIN | REAR BRAKE CLEVIS | HORQUILLA PEDAL FRENO |
| 8 | H123 | H123 | H123 | H123 | ENTRETOISE PEDALE FREIN | REAR BRAKE PEDAL BUSHING | CASQUILLO PEDAL FRENO |
| 9 | H121 | H121 | H121 | H121 | TIGE DE PEDALE DE FREIN | BRAKE PEDAL ROD | VARILLA PEDAL DE FRENO |
| 10 | H298 | H298 | H298 | H298 | CONTACTEUR DE FREIN AR | REAR BRAKE ELECTRIC SWITCH | INTERUPTOR FRENO TRASERO |
| 11 | R074 | R074 | R074 | R074 | JOINT | BANJO SEAL | ARANDELA BANJO |
| 12 | R059 | R059 | R059 | R059 | VIS RACCORD | BANJO SCREW | TORNILLO RACCORD ULS |
| 13 | R069 | R069 | R069 | R069 | DURITE | BRAKE HOSE | TUBO |
| 14 | C419 | C419 | C419 | C419 | VIS TH M6*20 | SCREW TH M6*20 | TORNILLO M6*20 DIN 933 |
| 15 | M263 | M263 | M263 | M263 | VIS CHC M8*40 | SCREW CHC M8*40 | TORNILLO M8*40 DIN 912 |
| 16 | M283 | M283 | M283 | M283 | VIS BHC M6*20 | SCREW BHC M6*20 | TORNILLO M6*16 ULS |
| 17 | C409 | C409 | C409 | C409 | VIS CHC M6*10 | SCREW CHC M6*10 | TORNILLO M6*10 DIN 912 |
| 18 | C413 | C413 | C413 | C413 | VIS CHC M8*16 | SCREW CHC M8*16 | TORNILLO M8*16 DIN 912 |
| 19 | M264 | M264 | M264 | M264 | VIS CHC M8*45 | SCREW CHC M8*45 | TORNILLO M8*45 DIN 912 |
| 20 | M309 | M309 | M309 | M309 | ECROU M6 | NUT M6 | TUERCA M6 |
| 21 | M305 | M305 | M305 | M305 | ECROU NYLSTOP M8 | NUT NYLSTOP M8 | TUERCA NYLSTOP M8 |
| 22 | M317 | M317 | M317 | M317 | RONDELLE M6*12 | WASHER M6*12 | ARANDELA M6*12 |

# Frein arriere / Read brake / Freno trasero

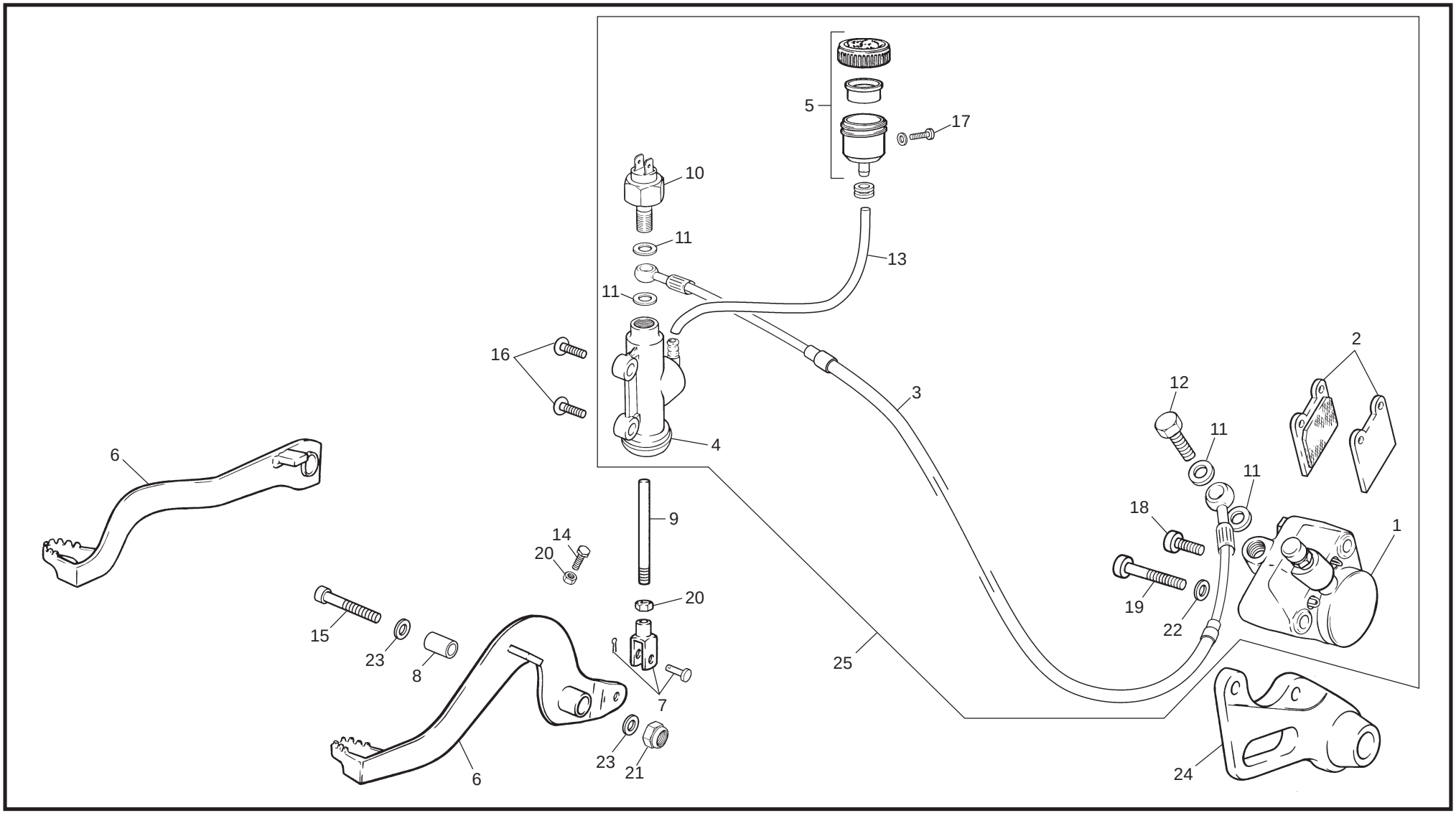

# Frein arriere / Read brake / Freno trasero

| POS. | 50 SM | 50 END | 125 SM | 125 END | FRANÇAIS | ENGLISH | ESPAÑOL |
|---|---|---|---|---|---|---|---|
| 23 | C430 | C430 | C430 | C430 | RONDELLE M8 | WASHER M8 | ARANDELA M8 |
| 24 | H177 | H177 | H192 | H192 | SUPPORT ETRIER DE FREIN | REAR BRAKE CALIPER SUPPORT | SOPORTE PINZA |
| 25 | H206 | H206 | H206 | H206 | FREIN ARR. PURGE | REAR BRAKE SYSTEM | FRENO TRASERO COMPLETO |

# Pot echappement / Exhaust pipe / Escape

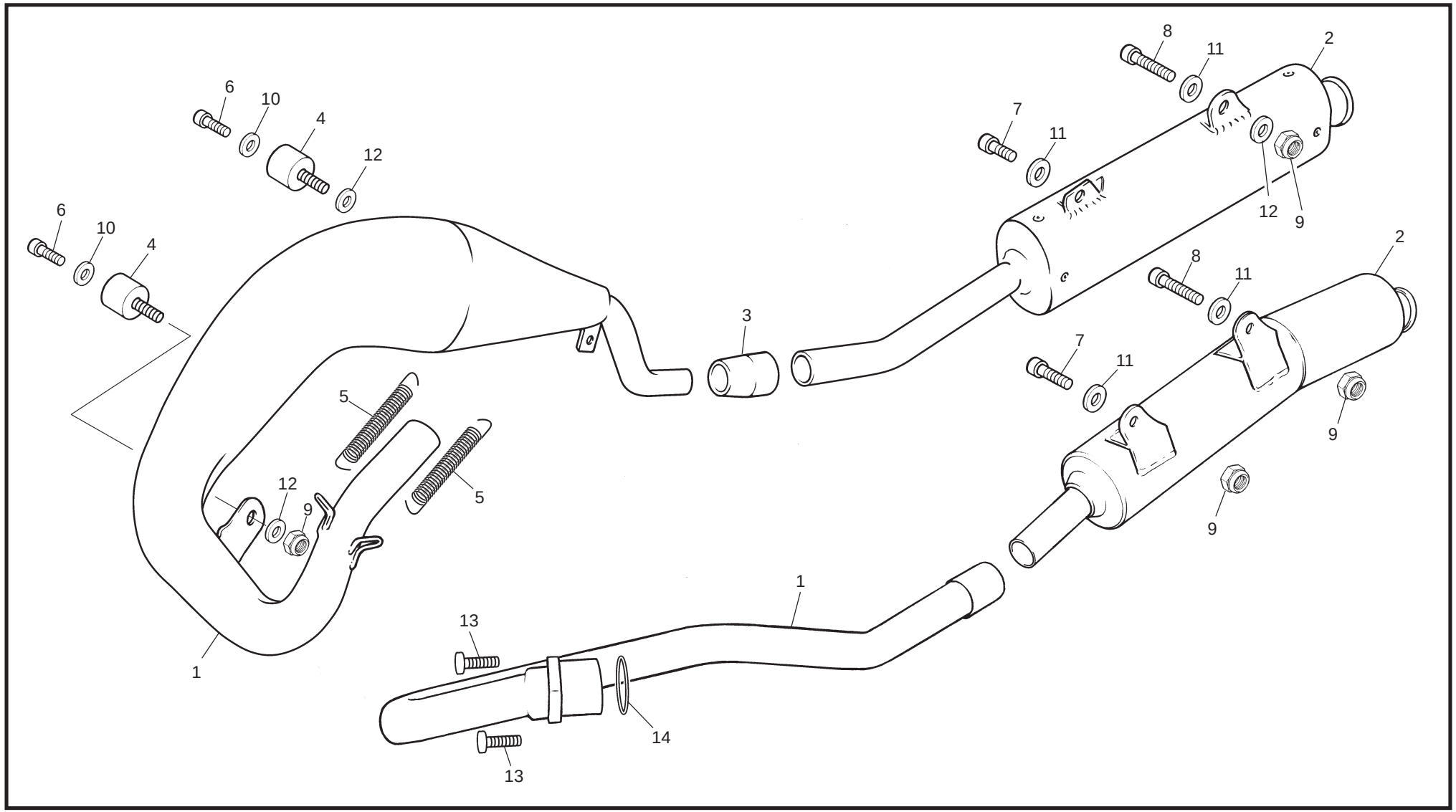

7

# Pot echappement / Exhaust pipe / Escape

| POS. | 50 SM | 50 END | 125 SM | 125 END | FRANÇAIS | ENGLISH | ESPAÑOL |
|---|---|---|---|---|---|---|---|
| 1 | H198 | H198 | H314 | H314 | ECHAPPEMENT | EXHAUST | ESCAPE |
| 1 | H199 | H199 | -- | -- | POT E1 | EXHAUST E1 | ESCAPE E1 |
| 1 | H300 | H300 | -- | -- | POT RACING | EXHAUST RACING | ESCAPE RACING |
| 1 | H330 | H330 | -- | -- | POT SUISSE | EXHAUST SWISS | ESCAPE SUIZA |
| 1 | H347 | H347 | -- | -- | POT RACING E1 | EXHAUST RACING E1 | ESCAPE RACING E1 |
| 2 | H200 | H200 | H197 | H197 | SILENCIEUX | SILENCER | SILENCIADOR |
| 3 | H055 | H055 | -- | -- | MANCHON POT/SILENCIEUX | EXHAUST/SILENCER GASKET | JUNTA ESCAPE/SILENCIADOR |
| 4 | H058 | H058 | -- | -- | SILENTBLOC DE POT | EXHAUST RUBBER BLOCK | SILENTBLOCK DE ESCAPE |
| 5 | H204 | H204 | -- | -- | RESSORT DE POT | EXHAUST SPRING | MUELLE ESCAPE |
| 6 | C409 | C409 | -- | -- | VIS CHC M6*10 | SCREW CHC M6*10 | TORNILLO M6*10 DIN 912 |
| 7 | M251 | M251 | -- | -- | VIS CHC M6*16 | SCREW CHC M6*16 | TORNILLO M6*16 DIN 912 |
| 8 | C410 | C410 | C410 | C410 | VIS CHC M6*15 | SCREW CHC M6*15 | TORNILLO M6*15 DIN 912 |
| 9 | M306 | M306 | M306 | M306 | ECROU NYLSTOP M6 | NUT NYLSTOP M6 | TUERCA NYLSTOP M6 |
| 10 | M317 | M317 | M317 | M317 | RONDELLE M6*12 | WASHER M6*12 | ARANDELA M6*12 |
| 11 | C427 | C427 | C427 | C427 | RONDELLE M6*15 | WASHER M6*15 | ARANDELA M6*15 |
| 12 | H005 | H005 | -- | -- | RONDELLE ISOLANTE | INSULATING WASHER | ARANDELA AISLANTE |
| 13 | -- | -- | M252 | M252 | VIS CHC M6*20 | SCREW CHC M6*20 | TORNILLO M6*20 DIN 912 |
| 14 | -- | -- | 0496 | 0496 | JOINT ECHAPEMENT | EXHAUST GASKET | JUNTA ESCAPE |

# Reservoir essence / Fuel tank / Depósito gasolina

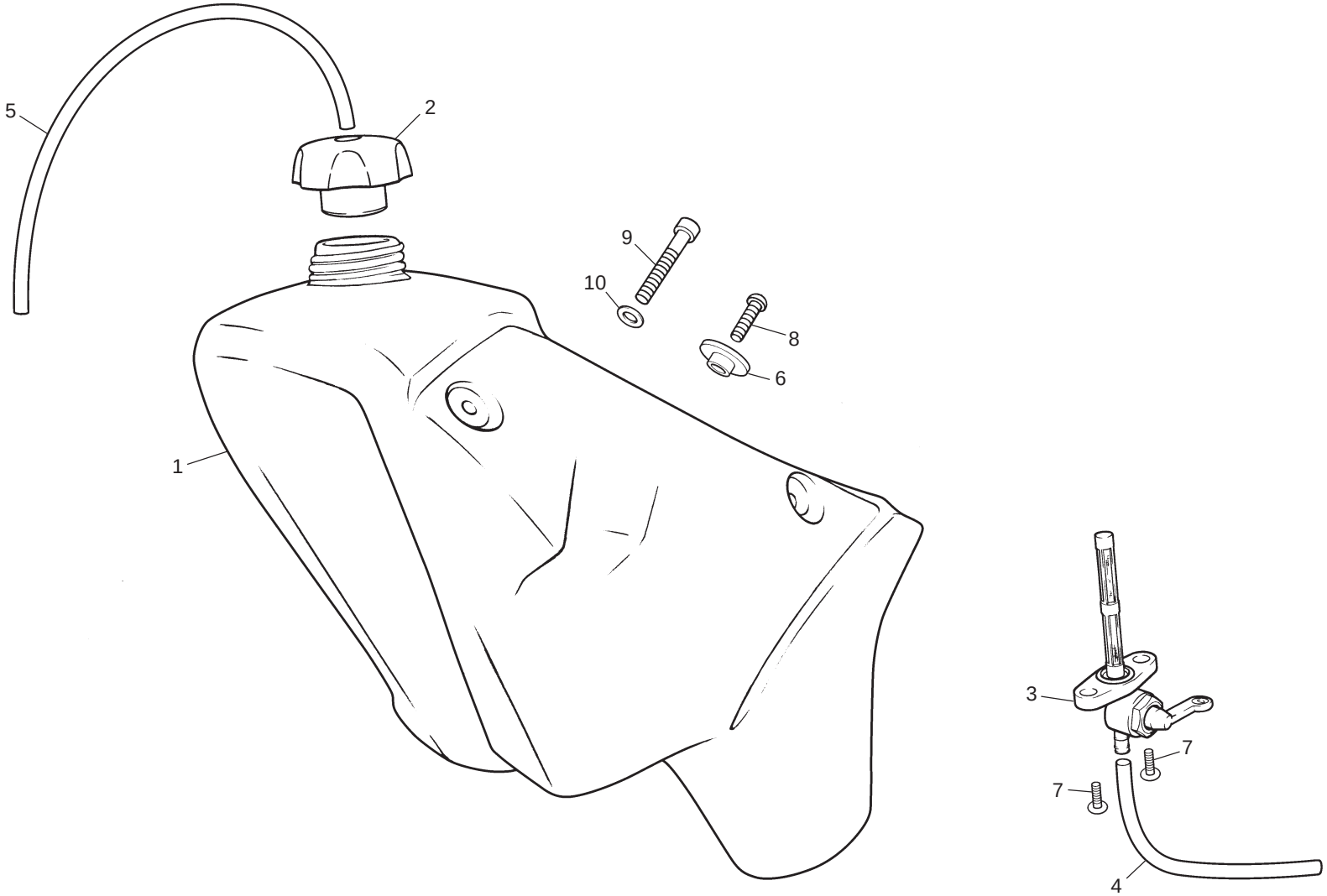

# Reservoir essence / Fuel tank / Depósito gasolina

| POS. | 50 SM | 50 END | 125 SM | 125 END | FRANÇAIS | ENGLISH | ESPAÑOL |
|---|---|---|---|---|---|---|---|
| 1 | H035 | H035 | H034 | H034 | RESERVOIR ESSENCE | FUEL TANK | DEPÓSITO DE GASOLINA |
| 2 | C022 | C022 | C022 | C022 | BOUCHON DE RESERVOIR ESSENCE | FUEL TANK CAP | TAPON GASOLINA |
| 3 | C023 | C023 | C023 | C023 | ROBINET D'ESSENCE | FUEL PETCOCK | GRIFO GASOLINA |
| 4 | H041 | H041 | -- | -- | DURITE ESSENCE EURO O 5X10X128 | FUEL LINE | TUBO |
| 4 | H040 | H040 | -- | -- | DURITE E1 | FUEL LINE | TUBO E1 |
| 5 | -- | -- | H045 | H045 | DURITE RENIFLARD | FUEL VENT LINE | TUBO |
| 6 | H118 | H118 | H118 | H118 | FIXATION SELLE | FASTNER SEAT | FIJACION ASIENTO |
| 7 | M278 | M278 | M278 | M278 | VIS BHC M5*10 | SCREW BHC M5*10 | TORNILLO M5*10 ULS |
| 8 | M279 | M279 | M279 | M279 | VIS BHC M6*20 | SCREW BHC M6*20 | TORNILLO M6*20 ULS |
| 9 | C406 | C406 | C406 | C406 | VIS CHC M8*50 | SCREW CHC M8*50 | TORNILLO M8*50 DIN 912 |
| 10 | C430 | C430 | C430 | C430 | RONDELLE M8 | WASHER M8 | ARANDELA M8 |

# Radiateur / Radiator / Radiador

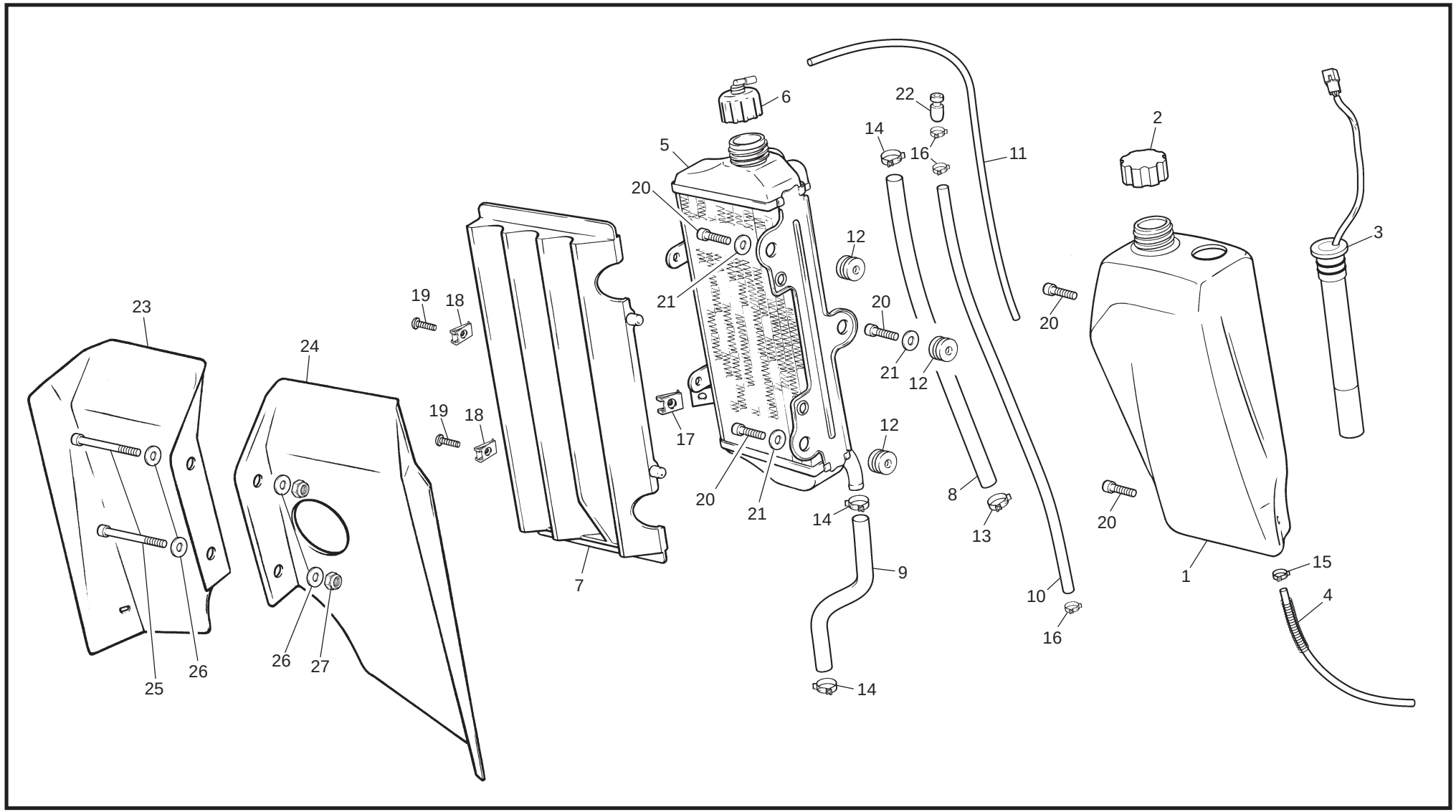

9

# Radiateur / Radiator / Radiador

| POS. | 50 SM | 50 END | 125 SM | 125 END | FRANÇAIS | ENGLISH | ESPAÑOL |
|---|---|---|---|---|---|---|---|
| 1 | H037 | H037 | -- | -- | RESERVOIR HUILE | OIL RESERVOIR | DEPOSITO DE ACEITE |
| 2 | H036 | H036 | -- | -- | BOUCHON RESERVOIR HUILE | OIL RESERVOIR CAP | TAPON DEPOSITO ACEITE |
| 3 | H159 | H159 | -- | -- | SONDE NIVEAU HUILE | OIL LEVEL PROBE | SONDA NIVEL ACEITE |
| 4 | H205 | H205 | -- | -- | RESSORT DURITE HUILE | SPRING FOR OIL HOSE | MUELLE PARA TUBO ACEITE |
| 5 | H220 | H220 | -- | -- | RADIATEUR | RADIATOR | RADIADOR |
| 6 | R046 | R046 | -- | -- | BOUCHON RADIATEUR | RADIATOR CAP | TAPON RADIADOR |
| 7 | H028 | H028 | -- | -- | GRILLE RADIATEUR | RADIATOR COVER | REJILLA RADIADOR |
| 8 | H049 | H049 | -- | -- | DURITE SUP. RADIATEUR | TOP RADIATOR HOSE | TUBO SUPERIOR RADIADOR |
| 9 | H047 | H047 | -- | -- | DURITE INF. RADIATEUR | LOWER RADIATOR HOSE | TUBO RADIADOR INFERIOR |
| 10 | H048 | H048 | -- | -- | DURITE RECHAUFFEUR EURO 0 | INTAKE HEATER HOSE | TUBO CIRCUITO AGUA ADMISION |
| 11 | H046 | H046 | -- | -- | DURITE TROP PLEIN | OVERFLOW HOSE | TUBO REBOSADERO |
| 12 | H059 | H059 | -- | -- | SILENTBLOCK RADIATEUR | RADIATOR SILENTBLOCK | SILENTBLOCK RADIADOR |
| 13 | H262 | H262 | -- | -- | COLLIER CLIC 86-245 | HOSE CLAMP 86-245 | ABRAZADERA CLIC 86-245 |
| 14 | H261 | H261 | -- | -- | COLLIER CLIC 86-230 | HOSE CLAMP 86-230 | ABRAZADERA CLIC 86-230 |
| 15 | H264 | H264 | -- | -- | COLLIER CLIC 55-80 | HOSE CLAMP 55-80 | ABRAZADERA CLIC 55-80 |
| 16 | H263 | H263 | -- | -- | COLLIER CLIC 66-125 | HOSE CLAMP 66-125 | ABRAZADERA CLIC 66-125 |
| 17 | M308 | M308 | -- | -- | AGRAFFE M6 | NUT CLIP M6 | TUERCA CLIP M6 |
| 18 | M378 | M378 | -- | -- | ECROU CLIP M5 | NUT CLIP M5 | TUERCA CLIP M5 |
| 19 | M278 | M278 | -- | -- | VIS BHC 5*10 | SCREW CHC 5*10 | TORNILLO 5*10 DIN 912 |
| 20 | C409 | C409 | -- | -- | VIS CHC 6*10 | SCREW CHC 6*10 | TORNILLO 6*10 DIN 912 |
| 21 | C428 | C428 | -- | -- | RONDELLE 6*20 | WASHER 6*20 | ARANDELA 6*20 |
| 22 | 0495 | 0495 | -- | -- | BOUCHON CORP INJECTION | CAP INJECTION BODY | TAPON CUERPO INYECCION |
| 23 | -- | -- | H193 | H193 | TOLE FIX. OUIE DROIT 125 | TANK COVER SUPPORT R 125 | MASCARILLA TAPA DEPOSITO DERE.125 |
| 24 | -- | -- | H194 | H194 | TOLE FIX. OUIE GAUCHE 125 | TANK COVER SUPPORT L. 125 | MASCARILLA TAPA DEPOSITO IZQ. 125 |

# Radiateur / Radiator / Radiador

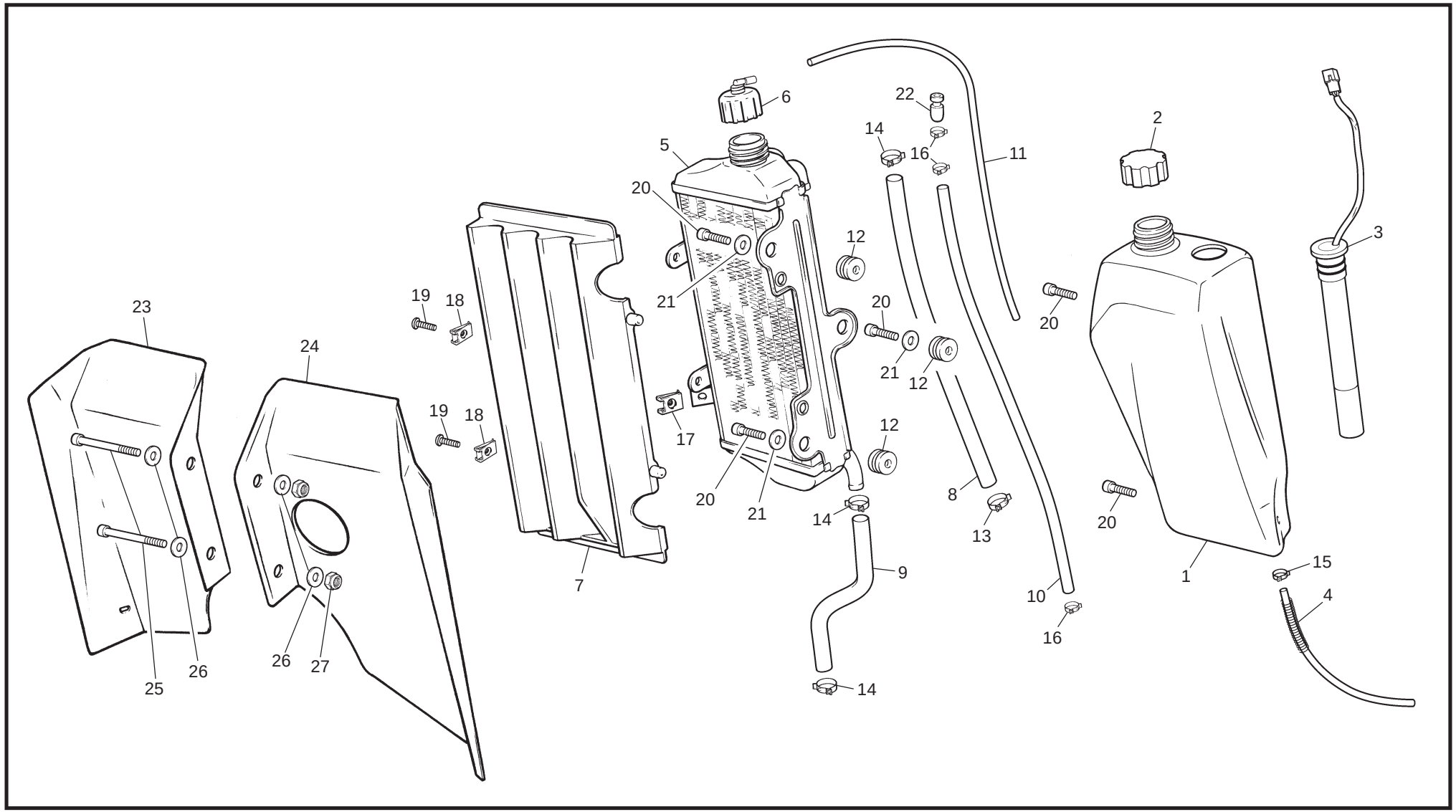

# Radiateur / Radiator / Radiador

| POS. | 50 SM | 50 END | 125 SM | 125 END | FRANÇAIS | ENGLISH | ESPAÑOL |
|---|---|---|---|---|---|---|---|
| 25 | -- | -- | M254 | M254 | VIS BHC 6*55 | SCREW CHC 6*55 | TORNILLO 6*55 DIN 912 |
| 26 | -- | -- | M427 | M427 | RONDELLE 6*15 | WASHER 6*15 | ARANDELA 6*15 |
| 27 | -- | -- | M306 | M306 | ECROU AUTOBLOQUANT M6 | NUT NYLSTOP M6 | TUERCA NYLSTOP M6 |

# Filtre / Filter / Filtro

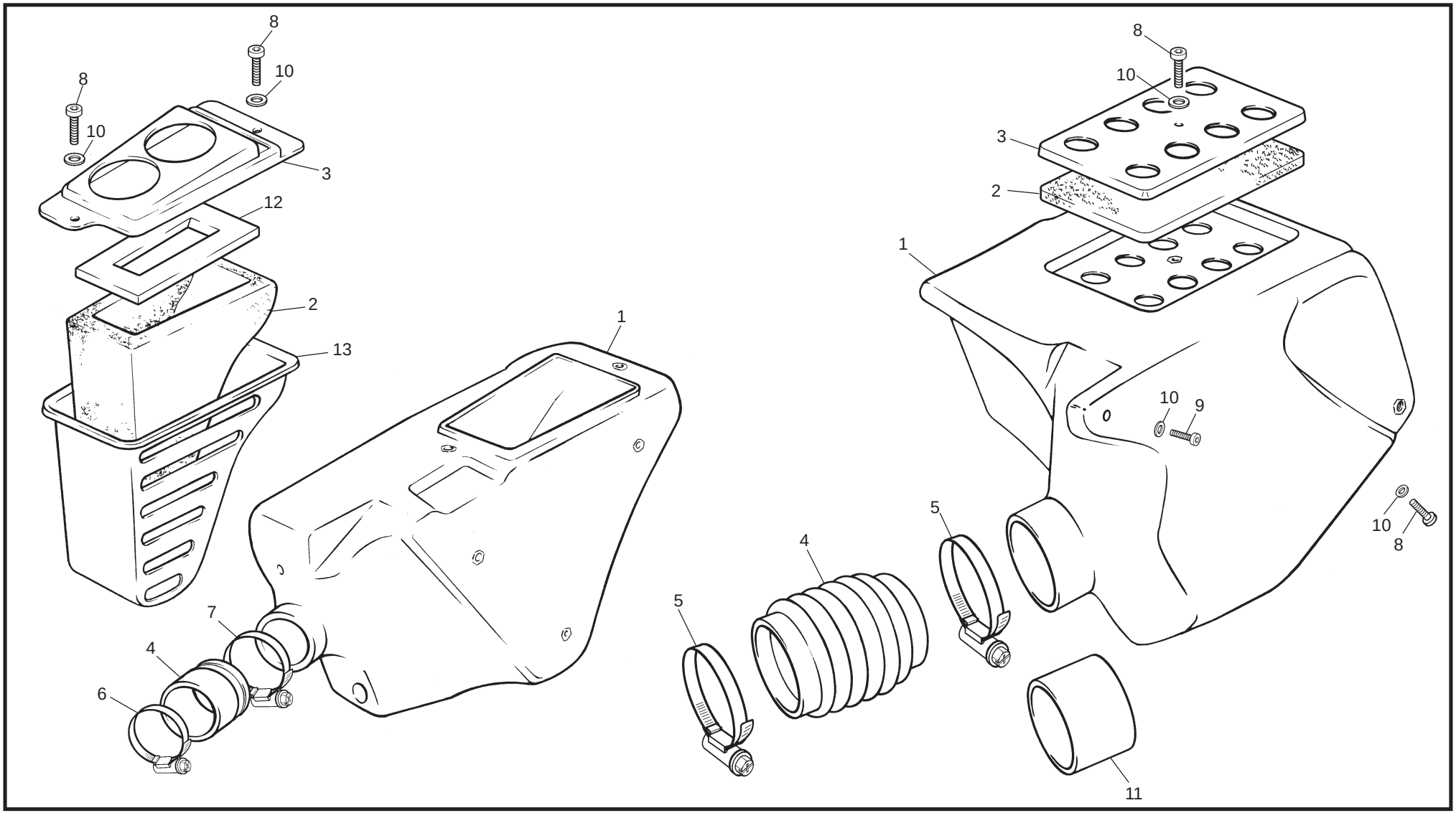

# Filtre / Filter / Filtro

| POS. | 50 SM | 50 END | 125 SM | 125 END | FRANÇAIS | ENGLISH | ESPAÑOL |
|---|---|---|---|---|---|---|---|
| 1 | H033 | H033 | H032 | H032 | BOITE FILTRE AIR | AIR FILTER BOX | CAJA DE FILTRO |
| 2 | H064 | H064 | H063 | H063 | MOUSSE FILTRE AIR | AIR FILTER | ESPUMA DE FILTRO |
| 3 | H076 | H076 | H073 | H073 | COUVERCLE FILTRE AIR | AIR FILTER COVER | TAPA FILTRO |
| 4 | H044 | H044 | C109 | C109 | MANCHON FILTRE A AIR | AIR FILTER TO CARBURETOR HOSE | TOBERA CAJA FILTRO |
| 5 | C415 | C415 | -- | -- | COLLIER ZEBRA | HOSE CLAMP | ABRAZADERA ZEBRA 50/70 |
| 6 | -- | -- | C485 | C485 | COLLIER ZEBRA | HOSE CLAMP | ABRAZADERA ZEBRA 30/45 |
| 7 | -- | -- | C486 | C486 | COLLIER ZEBRA | HOSE CLAMP | ABRAZADERA ZEBRA 32/50 |
| 8 | M251 | M251 | M251 | M251 | VIS CHC M6*16 | SRCREW CHC M6*16 | TORNILLO M6*16 DIN 912 |
| 9 | M284 | M284 | M284 | M284 | VIS BHC M6*25 | SRCREW BHC M6*25 | TORNILLO M6*25 ULS |
| 10 | C427 | C427 | -- | -- | RONDELLE M6*15 | WASHER M6*15 | ARANDELA M6*15 |
| 11 | H057 | H057 | -- | -- | REDUCTION MANCH/CARBU CAT. | AIR BOX SLEEVE REDUCTION FOR CATAL. | REDUCCION TOBERA CAJA FIL. CATALIZ. |
| 12 | -- | -- | H074 | H074 | CHAPEAU MOUSSE FILTRE AIR125 | AIR FILTER HAT 125 | SOMBRERO ESPUMA FILTRO 125 |
| 13 | -- | -- | H075 | H075 | SUPPORT MOUSE FILTRE AIR 125 | AIR FILTER SUPPORT 125 | SOPORTE ESPUMA FILTRO 125 |

# Faisceau electrique / Electric cable / Instalación eléctrica

## 50 c.c.c.

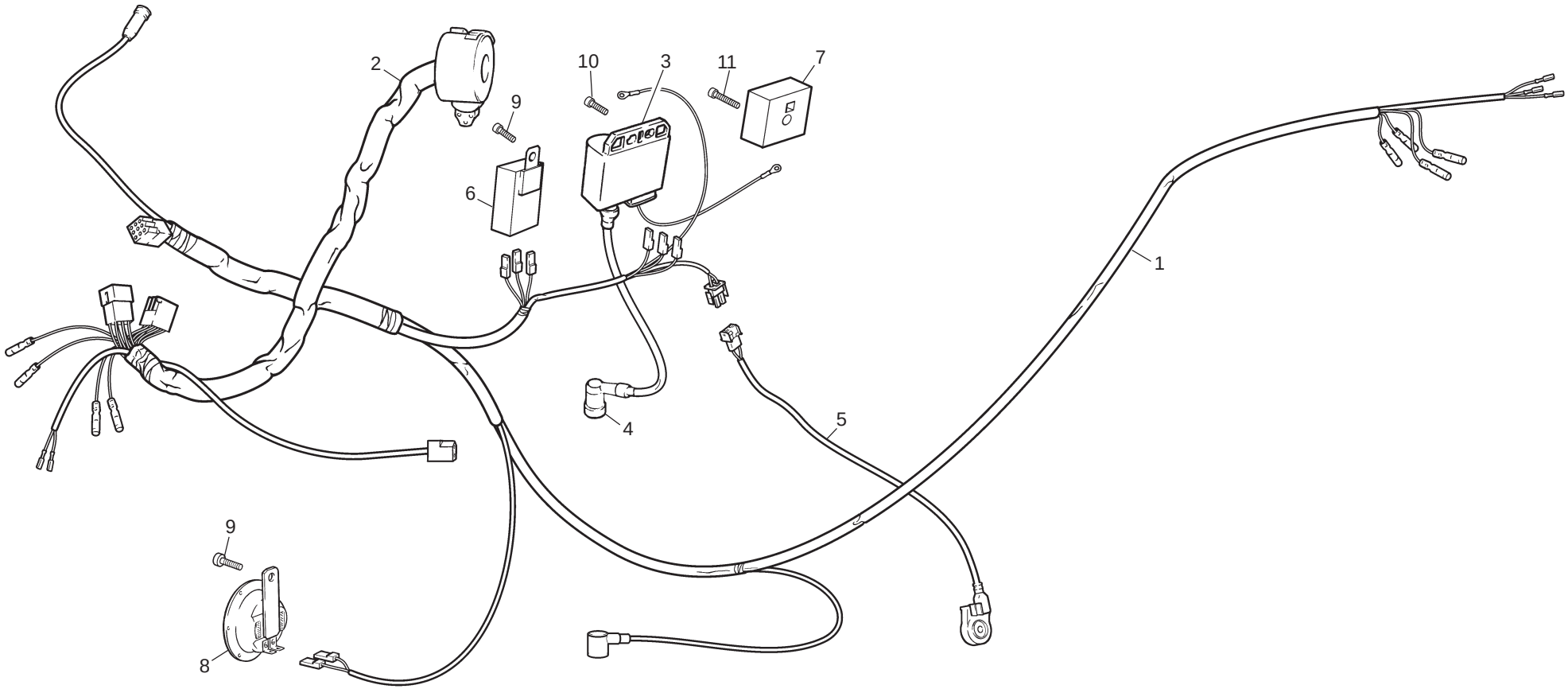

# Faisceau electrique / Electric cable / Instalación eléctrica

| POS. | 50 SM | 50 END | 125 SM | 125 END | FRANÇAIS | ENGLISH | ESPAÑOL |
|---|---|---|---|---|---|---|---|
| 1 | H138 | H138 | -- | -- | FAISCEAU ELECTRIQUE | ELECTRIC CABLE | INSTALACIÓN ELÉCTRICA |
| 2 | H153 | H153 | -- | -- | COMMODO ELECTRIQUE 50 | ELECTRONIC CONTROL | COMANDO ELÉCTRICO |
| 2 | H329 | H329 | -- | -- | COMMODO ELECTRIQUE 50 SUISSE | ELECTRONIC CONTROL SWISS | COMANDO ELÉCTRICO SUISSE |
| 3 | H133 | H133 | -- | -- | BOBINE HT 50 | COIL HT | BOBINA HT |
| 4 | H146 | H146 | -- | -- | ANTI. PARASITE | SPARK PLUG LEAD | PIPA BUJIA |
| 5 | H147 | H147 | -- | -- | CONTACTEUR DE BEQUILLE | STAND SWITCH | INTERRUPTOR CABALLETE |
| 6 | H158 | H158 | -- | -- | CENTRALE CLIGNOTEUR 50 | TURN SIGNAL CONTROLS | CENTRAL DE INTERMITENTES |
| 7 | H148 | H148 | -- | -- | REGULATEUR 50 | REGULATOR 50 | REGULADOR |
| 8 | H165 | H165 | -- | -- | KLAXON 50 | HORN 50 | CLAXON 50 |
| 9 | C409 | C409 | -- | -- | VIS CHC M6*10 | SCREW CHC M6*10 | TORNILLO M6*10 DIN 912 |
| 10 | M251 | M251 | -- | -- | VIS CHC M6*30 | SCREW CHC M6*16 | TORNILLO M6*16 DIN 912 |
| 11 | M253 | M253 | -- | -- | VIS CHC M6*30 | SCREW CHC M6*30 | TORNILLO M6*30 DIN 912 |

# Faisceau electrique / Electric cable / Instalación eléctrica

## 125 c.c.c. (6 polos)

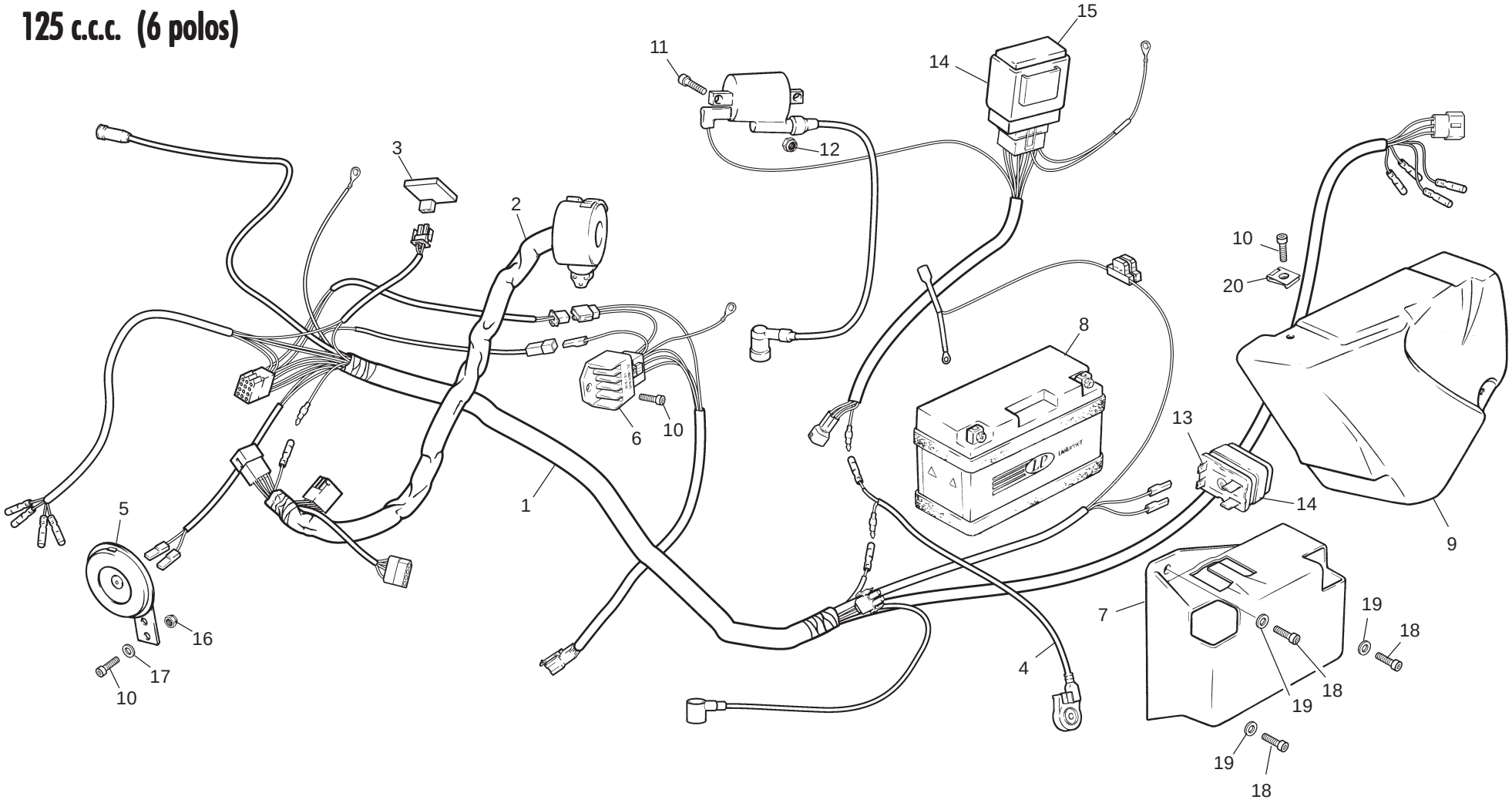

# Faisceau electrique / Electric cable / Instalación eléctrica

| POS. | 50 SM | 50 END | 125 SM | 125 END | FRANÇAIS | ENGLISH | ESPAÑOL |
|---|---|---|---|---|---|---|---|
| 1 | -- | -- | H348 | H348 | FAISCEAU ELECTRIQUE | ELECTRIC CABLE | INSTALACIÓN ELÉCTRICA 6 POLOS |
| 2 | -- | -- | H151 | H151 | COMMODO ELECTRIQUE 125 C | ELECTRONIC CONTROLS 125 | COMANDOS ELÉCTRICOS 125 |
| 3 | -- | -- | 0364 | 0364 | CENTRALE CLIGNOTEUR 125CITY CORP | TURN SIGNAL CONTR. 125 CITY CORP | CENTRAL INTERMITENTES 125 |
| 4 | -- | -- | H351 | H351 | CONTACTEUR DE BEQUILLE | STAND SWITCH | INTERRUPTOR CABALLETE 6 POLOS |
| 5 | -- | -- | H164 | H164 | KLAXON 125 CITY CORP | HORN 125 CITY CORP | CLAXON 125 CITY CORP |
| 6 | -- | -- | H131 | H131 | REGULATEUR 125 | REGULATOR 125 | REGULADOR 125 |
| 7 | -- | -- | H195 | H195 | SUPPORT BATTERIE 125 CITY CORP | BATTERY COVER 125 CITY CORP | SOPORTE BATERIA 125 CITY CORP |
| 8 | -- | -- | 0359 | 0359 | BATTERIE 12V. 7 AMP. | BATTERY 12V. 7 AMP. | BATERIA 12V. 7 AMP. |
| 9 | -- | -- | H070 | H070 | CACHE BATTERIE 125 CITY CORP | BATTERY COVER 125 CITY CORP | TAPA BATERIA 125 CITY CORP |
| 10 | -- | -- | M251 | M251 | VIS CHC M6*16 | SCREW CHC M6*16 | TORNILLO M6*16 DIN 912 |
| 11 | -- | -- | M250 | M250 | VIS CHC M5*16 | SCREW CHC M5*16 | TORNILLO M5*16 DIN 912 |
| 12 | -- | -- | M355 | M355 | ECROU AUTOBLOQUANT M5 | NUT NYSLTOP M5 | TUERCA NYLSTOP M5 |
| 13 | -- | -- | H150 | H150 | RELAI DE DEMARREUR 125 | RELAY FOR ELECTRIC START 125 | RELE DE ARRANQUE 125 |
| 14 | -- | -- | H052 | H052 | FIXATION RELAI DEMARREUR 125 | RELAY MOUNT FOR ELECTRIC START | FIJACION RELE ARRANQUE |
| 15 | -- | -- | Y763 | Y763 | CDI MOTEUR 125 4T 6 POLES | CDI BOX 125 4T 6 CONECT. | CDI MOTOR 125 4T 6 POLOS |
| 16 | -- | -- | M306 | M306 | ECROU AUTOBLOQUANT M6 | NUT NYLSTOP M6 | TUERCA NYLSTOP M6 |
| 17 | -- | -- | C427 | C427 | RONDELLE M6*15 | WASHER M6*15 | ARANDELA M6*15 |
| 18 | -- | -- | C409 | C409 | VIS CHC M6*10 | SCREW CHC M6*10 | TORNILLO M6*10 DIN 912 |
| 19 | -- | -- | C427 | C427 | RONDELLE M6*15 | WASHER M6*15 | ARANDELA M6*15 |
| 20 | -- | -- | M308 | M308 | ECROU CLIP M6 | NUT CLIP M6 | TUERCA CLIP M6 |

# Faisceau electrique / Electric cable / Instalación eléctrica

## 125 c.c.c. (8 polos)

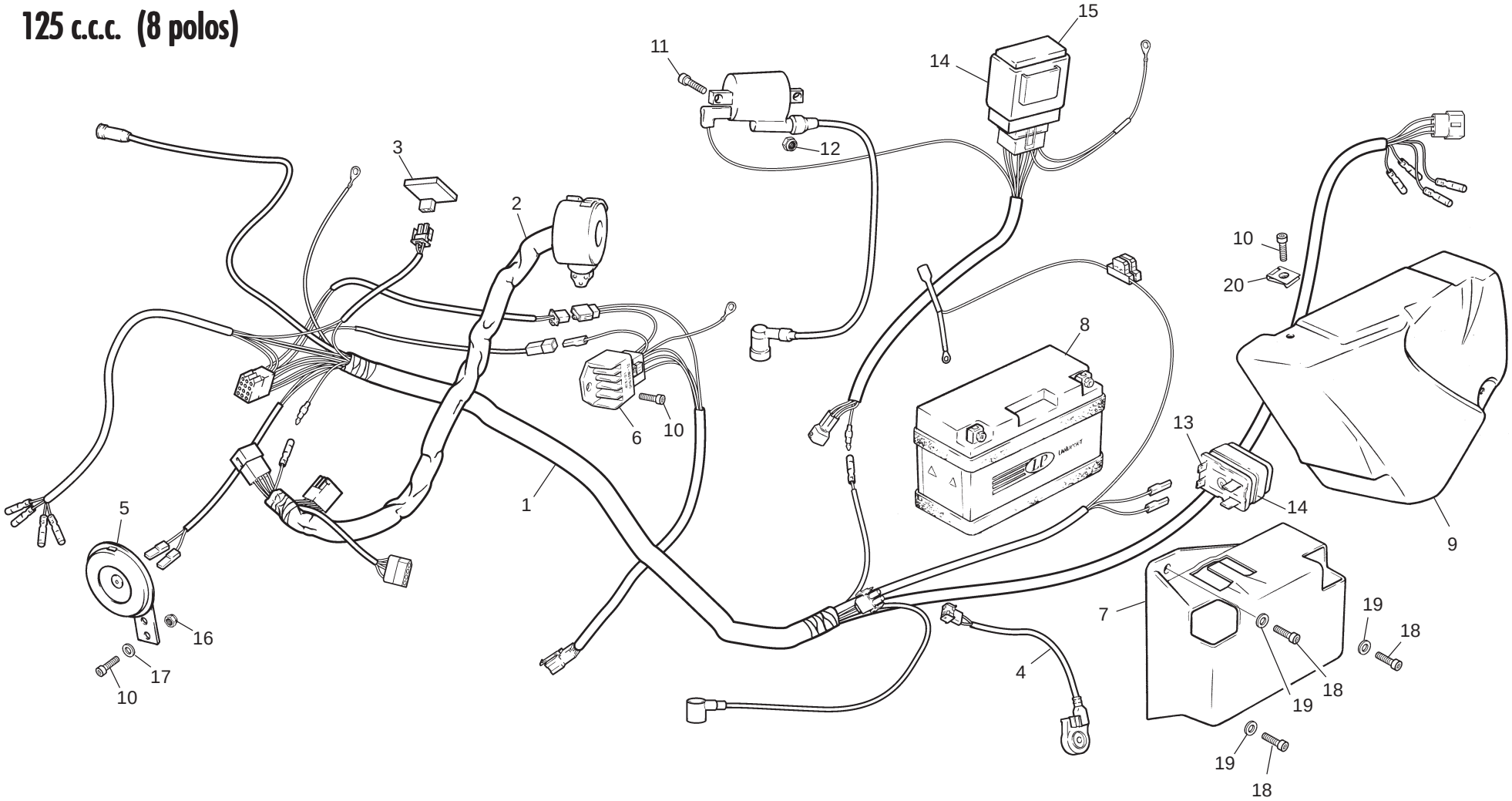

# Faisceau electrique / Electric cable / Instalación eléctrica

| POS. | 50 SM | 50 END | 125 SM | 125 END | FRANÇAIS | ENGLISH | ESPAÑOL |
|---|---|---|---|---|---|---|---|
| 1 | -- | -- | H137 | H137 | FAISCEAU ELECTRIQUE | ELECTRIC CABLE | INSTALACIÓN ELÉCTRICA |
| 2 | -- | -- | H151 | H151 | COMMODO ELECTRIQUE 125 | ELECTRONIC CONTROLS 125 | COMANDOS ELÉCTRICOS 125 |
| 3 | -- | -- | 0364 | 0364 | CENTRALE CLIGNOTEUR 125 | TURN SIGNAL CONTROLS 125 | CENTRAL INTERMITENTES 125 |
| 4 | -- | -- | H147 | H147 | CONTACTEUR DE BEQUILLE | STAND SWITCH | INTERRUPTOR CABALLETE |
| 5 | -- | -- | H164 | H164 | KLAXON 125 CITY CORP | HORN 125 CITY CORP | CLAXON 125 CITY CORP |
| 6 | -- | -- | H131 | H131 | REGULATEUR 125 | REGULATOR 125 | REGULADOR 125 |
| 7 | -- | -- | H195 | H195 | SUPPORT BATTERIE 125 CITY CORP | BATTERY COVER 125 CITY CORP | SOPORTE BATERIA 125 CITY CORP |
| 8 | -- | -- | 0359 | 0359 | BATTERIE 12V. 7 AMP. | BATTERY 12V. 7 AMP. | BATERIA 12V. 7 AMP. |
| 9 | -- | -- | H070 | H070 | CACHE BATTERIE 125 CITY CORP | BATTERY COVER 125 CITY CORP | TAPA BATERIA 125 CITY CORP |
| 10 | -- | -- | M251 | M251 | VIS CHC M6*16 | SCREW CHC M6*16 | TORNILLO M6*16 DIN 912 |
| 11 | -- | -- | M250 | M250 | VIS CHC M5*16 | SCREW CHC M5*16 | TORNILLO M5*16 DIN 912 |
| 12 | -- | -- | M355 | M355 | ECROU AUTOBLOQUANT M5 | NUT NYSLTOP M5 | TUERCA NYLSTOP M5 |
| 13 | -- | -- | H150 | H150 | RELAI DE DEMARREUR 125 | RELAY FOR ELECTRIC START 125 | RELE DE ARRANQUE 125 |
| 14 | -- | -- | H052 | H052 | FIXATION RELAI DEMARREUR 125 | RELAY MOUNT FOR ELECTRIC START | FIJACION RELE ARRANQUE |
| 15 | -- | -- | Y762 | Y762 | CDI MOTEUR 125 4T 8 POLES | CDI BOX 125 4T 8 CONECT. | CDI MOTOR 125 4T 8 POLOS |
| 16 | -- | -- | M306 | M306 | ECROU AUTOBLOQUANT M6 | NUT NYLSTOP M6 | TUERCA NYLSTOP M6 |
| 17 | -- | -- | C427 | C427 | RONDELLE M6*15 | WASHER M6*15 | ARANDELA M6*15 |
| 18 | -- | -- | C409 | C409 | VIS CHC M6*10 | SCREW CHC M6*10 | TORNILLO M6*10 DIN 912 |
| 19 | -- | -- | C427 | C427 | RONDELLE M6*15 | WASHER M6*15 | ARANDELA M6*15 |
| 20 | -- | -- | M308 | M308 | ECROU CLIP M6 | NUT CLIP M6 | TUERCA CLIP M6 |

# Phare / Headlight / Faro

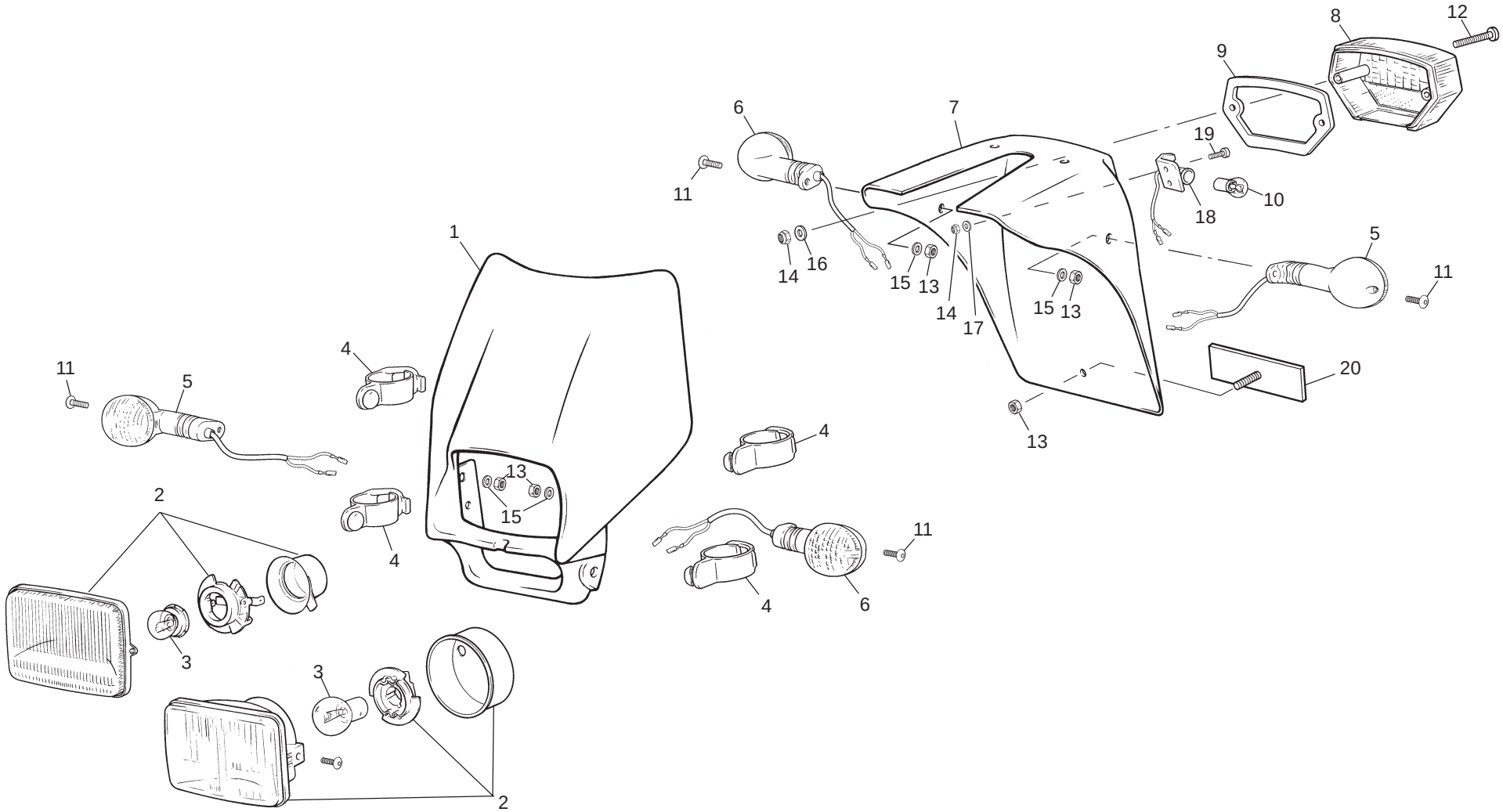

# Phare / Headlight / Faro

| POS. | 50 SM | 50 END | 125 SM | 125 END | FRANÇAIS | ENGLISH | ESPAÑOL |
|---|---|---|---|---|---|---|---|
| 1 | H030 | H030 | H030 | H030 | PLAQUE PHARE | FRONT LIGHT & COVER | PLACA FARO |
| 2 | H163 | H163 | H162 | H162 | OPTIQUE PLAQUE PHARE | OPTICS FOR FRONT LIGHT | OPTICA PLACA FARO |
| 3 | H248 | H248 | H253 | H253 | AMPOULE FEU AV | FRONT LIGHT BULB | BOMBILLA LUZ DEL. |
| 4 | H050 | H050 | H050 | H050 | ELASTIQUE PLAQUE PHARE | FRONT LIGHT RUBBER BAND | ELASTICO PLACA FARO |
| 5 | H166 | H166 | H166 | H166 | CLIGNOTEUR AVD/ARG | TURN SIGNAL FRONT/ RIGHT. | INTERMITENTE DEL.DER./TRAS.IZQ |
| 6 | H167 | H167 | H167 | H167 | CLIGNOTEUR AVG/ARD | TURN SIGNAL FRONT/LEFT | INTERMITENTE DEL./IZQ. TRAS./DER. |
| 7 | H026 | H026 | H026 | H026 | BAVETTE FEU AR COMPLETE | REAR NUMBER PLATE HOLDER | PORTAMATRICULAS TRASERO |
| 8 | H160 | H160 | H160 | H160 | CAPUCHON DE FEU ARR. | REAR LIGHT COVER | CRISTAL PILOTO TRASERO |
| 9 | H042 | H042 | H042 | H042 | JOINT FEU AR | REAR LIGUT GASKET | JUNTA PILOTO TRASERO |
| 10 | H252 | H252 | H252 | H252 | AMPOULE FEU ARRIERE | REAR LIGHT BULB | BOMBILLA PILOTO TRASERO |
| 11 | M283 | M283 | M283 | M283 | VIS BHC M6*16 | SCREW BHC M6*16 | TORNILLO M6*16 ULS |
| 12 | C431 | C431 | C431 | C431 | VIS TCB M5*50 | SCREW TCB M5*50 | TORNILLO ESTRELLA M5*50 |
| 13 | M306 | M306 | M306 | M306 | ECROU AUTOBLOQUANT M6 | NUT NYLSTOP M6 | TUERCA NYLSTOP M6 |
| 14 | M355 | M355 | M355 | M355 | ECROU AUTOBLOQUANT M5 | NUT NYSLTOP M5 | TUERCA NYLSTOP M5 |
| 15 | M379 | M379 | M379 | M379 | RONDELLE M5*15 | WASHER M5*15 | ARANDELA M5*15 |
| 16 | M317 | M317 | M317 | M317 | RONDELLE M6*12 | WASHER M6*12 | ARANDELA M6*12 |
| 17 | M379 | M379 | M379 | M379 | RONDELLE M5*15 | WASHER M5*15 | ARANDELA M5*15 |
| 18 | H268 | H268 | H268 | H268 | FAISCEAU PORTE AMPOULE AR | REAR LIGHT CABLE | INSTALACIÓN BOMBILLA TRASERA |
| 19 | M250 | M250 | M250 | M250 | VIS CHC M5*16 | SCREW CHC M5*16 | TORNILLO M5*16 DIN 912 |
| 20 | H161 | H161 | H161 | H161 | CATADIOPTRE | REFLECTOR | REFLECTOR |

# Tableau de bord / Speedmeter table / Tablier

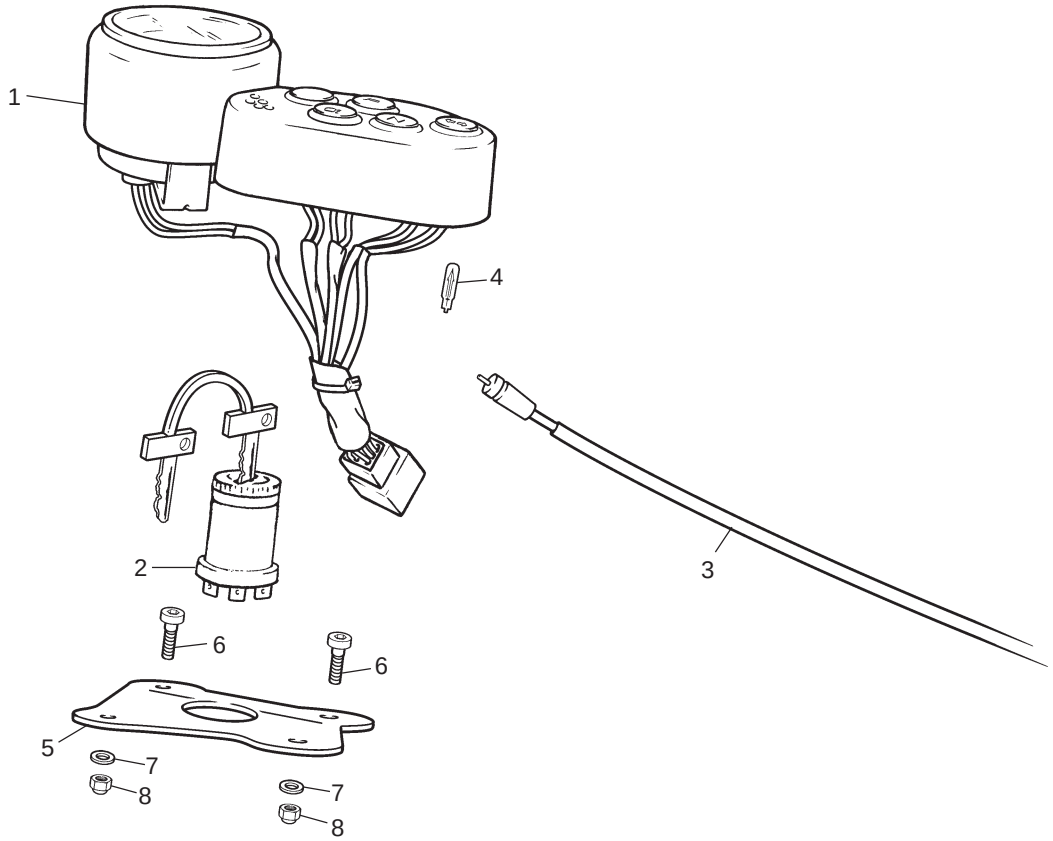

# Tableau de bord / Speedmeter table / Tablier

| POS. | 50 SM | 50 END | 125 SM | 125 END | FRANÇAIS | ENGLISH | ESPAÑOL |
|---|---|---|---|---|---|---|---|
| 1 | H156 | H156 | H154 | H156 | TABLEAU DE BORD | SPEEDOMETER | TABLERO DE A BORDO |
| 2 | H155 | H155 | H155 | H155 | CONTACT. A CLEF | KEY CONTACT | CONTAC. LLAVE |
| 3 | H135 | H135 | H135 | H135 | CABLE COMPTEUR | SPEEDOMETER CABLE | CABLE CUENTAQUILÓMETROS |
| 4 | R364 | R364 | R364 | R364 | AMPOULE | BULB | BOMBILLA |
| 5 | H191 | H191 | H191 | H191 | PATTE TABLEAU DE BORD | SPEEDOMETER SUPPORT | SOPORTE TABLERO DE A BORDO |
| 6 | C409 | C409 | C409 | C409 | VIS CHC M6*10 | SCREW CHC M6*10 | TORNILLO M6*10 DIN 912 |
| 7 | C427 | C427 | C427 | C427 | RONDELLE M6*15 | WASHER M6*15 | ARANDELA M6*15 |
| 8 | M306 | M306 | M306 | M306 | ECROU AUTOBLOQUANT M6 | NUT NYLSTOP M6 | TUERCA NYLSTOP M6 |

# Roue avant / Front wheel / Rueda dalentera

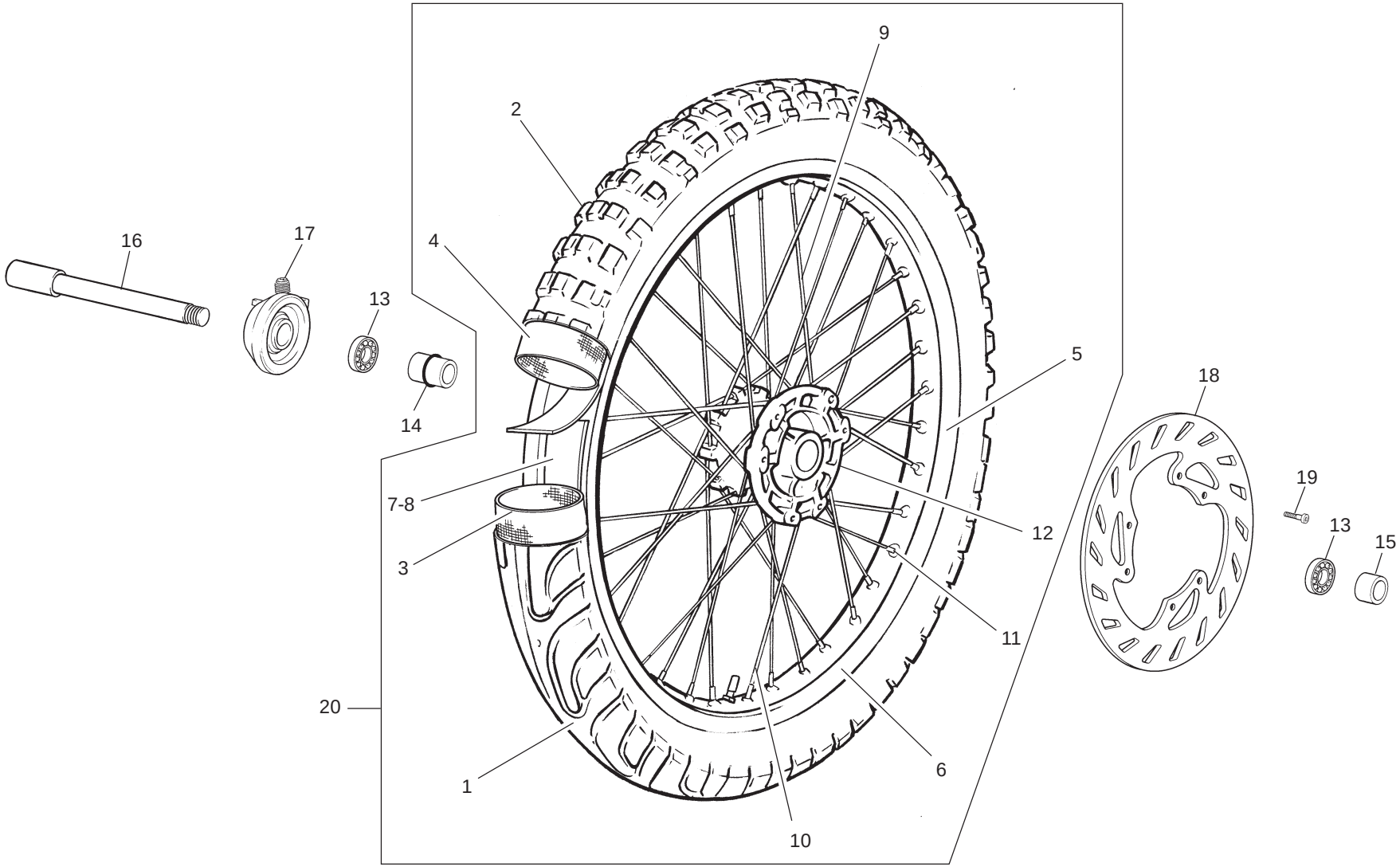

# Roue avant / Front wheel / Rueda dalentera

| POS. | 50 SM | 50 END | 125 SM | 125 END | FRANÇAIS | ENGLISH | ESPAÑOL |
|---|---|---|---|---|---|---|---|
| 1 | H080 | -- | H080 | -- | PNEU AV SM 100/80.17 | FRONT TIRE SM 100/80.17 | NEUMATICO DEL SM 100/80.17 |
| 2 | -- | H084 | -- | H084 | PNEU AV. END 90/90.21 | FRONT TIRE END 90/90.21 | NEUMATICO DEL. END 90/90.21 |
| 3 | H081 | -- | H081 | -- | CHAMBRE AV SM 300 X 17 | FRONT INNER TUBE SM 300 X 17 | CAMARA DELANTERA SM 300 X 17 |
| 4 | -- | H077 | -- | H077 | CHAMBRE AV END 300 X 21 | FRONT INNER TUBE END 300 X 21 | CAMARA DEL END 300 X 21 |
| 5 | H092 | -- | H092 | -- | JANTE AV. SM | FRONT RIM SM | LLANTA DELANTERA SM. |
| 5 | H340 | -- | H340 | -- | JANTE AV. ROUGE | FRONT RIM RED | LLANTA DELANTERA SM ROJO |
| 5 | H342 | -- | H342 | -- | JANTE AV. OR | FRONT RIM GOLD | LLANTA DELANTERA SM ORO |
| 6 | -- | H093 | -- | H093 | JANTE AV. TRAIL | FRONT RIM END | LLANTA DELANTERA TRAIL |
| 6 | -- | H374 | -- | -- | JANTE AV. TRAIL BLEU | FRONT RIM END BLUE | LLANTA DELANTERA TRAIL AZUL |
| 7 | H079 | -- | H079 | -- | FOND DE JANTE 17/18 | 17/18" RIM RUBBER BAND | PROTECTOR LLANTA 17 SM |
| 8 | -- | H078 | -- | H078 | FOND DE JANTE 17/18 | FRONT RIM RUBBER BAND | PROTECTOR LLANTA 21 END |
| 9 | H096 | -- | H096 | -- | RAYON AV/ARR SM 196 X 3.08 | SPOKE FRONT/REAR SM 196 X 3.08 | RADIO DEL/TRAS SM 196 X 3.08 |
| 10 | -- | H097 | -- | H097 | RAYON AV. TRAIL248.5 X 3.08 | FRONT SPOKE END 248.5 X 3.08 | RADIO DEL. TRAIL 248.5 X 3.08 |
| 11 | H089 | H089 | H089 | H089 | ECROU DE RAYON | SPOKE NIPPLE | CABEZA DE RADIO |
| 12 | H091 | H091 | H091 | H091 | MOYEU AV HRD | FRONT HUB HRD | BUJE DELANTERO HRD |
| 13 | R360 | R360 | R360 | R360 | ROULEMENT MOYEU AV | BEARING FRONT HUB | RODAMIENTO BUJE DELANTERO |
| 14 | R359 | R359 | R359 | R359 | ENTRETOISE INTERIEURE | FRONT HUB SPACER | SEPARADOR BUJE DELANTERO |
| 15 | H114 | H114 | H114 | H114 | ENTRETOISE ROUE AV. | FRONT WHEEL SPACER | CASQUILLO RUEDA DEL. |
| 16 | H113 | H113 | H113 | H113 | AXE ROUE AV. | FRONT WHEEL AXLE | EJE RUEDA DEL. |
| 17 | H134 | H136 | H134 | H136 | PRISE COMPTEUR | SPEEDOMETER DRIVE | REENVIO CUENTA KM |
| 18 | H099 | H099 | H099 | H099 | DISQUE AV. TRAIL | FRONT DISC BRAKE END | DISCO FRENO DEL. TRAIL. |
| 19 | M249 | M249 | M249 | M249 | VIS CHC M6*20 | SCREW CHC M6*20 | TORNILLO CHC M6*20 |

# Roue avant / Front wheel / Rueda dalentera

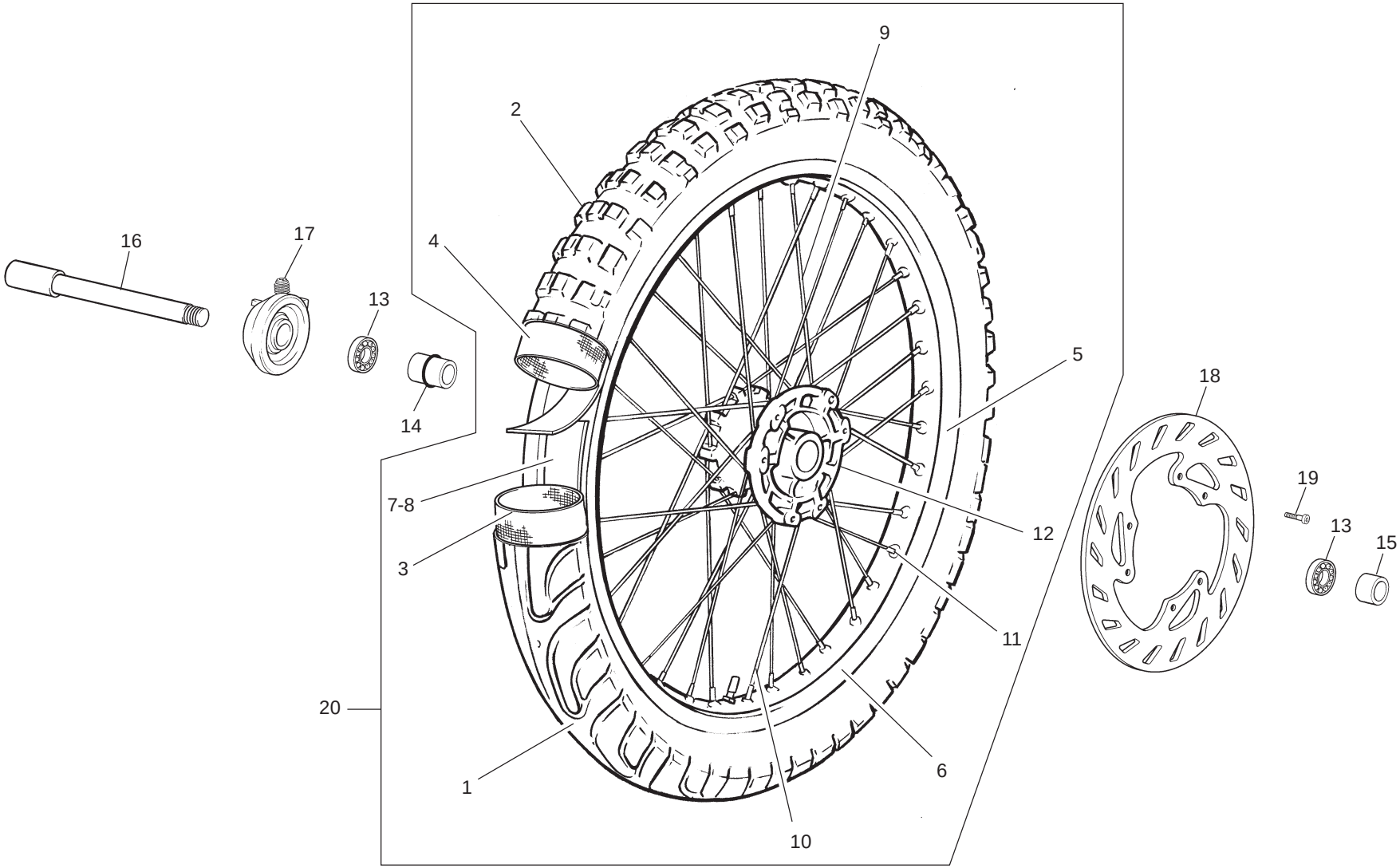

# Roue avant / Front wheel / Rueda dalentera

| POS. | 50 SM | 50 END | 125 SM | 125 END | FRANÇAIS | ENGLISH | ESPAÑOL |
|---|---|---|---|---|---|---|---|
| 20 | H269 | -- | H269 | -- | ROUE AV SM | FRONT WHEEL SM | RUEDA DEL. SM |
| 20 | H346 | -- | H346 | -- | ROUE AV SM OR | FRONT WHEEL SM GOLD | RUEDA DEL. SM ORO |
| 20 | H344 | -- | H344 | -- | ROUE AV SM ROUGE | FRONT WHEEL SM RED | RUEDA DEL. SM ROJO |
| 20 | -- | H271 | -- | H271 | ROUE AV END | FRONT WHEEL END | RUEDA DEL END |

# Roue arriere / Rear wheel / Rueda trasera

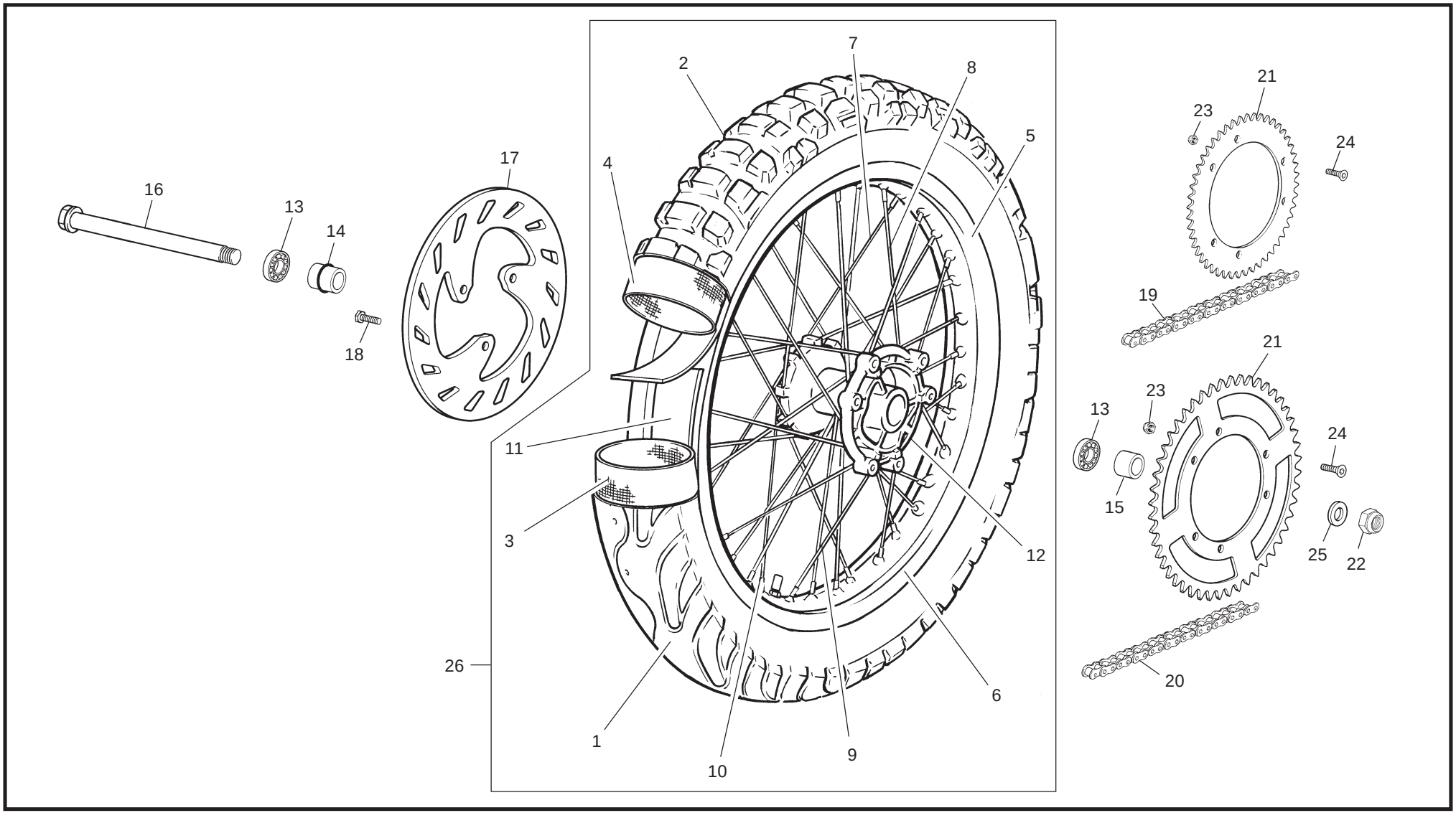

# Roue arriere / Rear wheel / Rueda trasera

| POS. | 50 SM | 50 END | 125 SM | 125 END | FRANÇAIS | ENGLISH | ESPAÑOL |
|---|---|---|---|---|---|---|---|
| 1 | H083 | -- | H083 | -- | PNEU ARR SM 130/70.17 | REAR TIRE SM 130/70.17 | NEUMATICO TRAS SM 130/70.17 |
| 2 | -- | H086 | -- | H086 | PNEU ARR END 110/80.18 | REAR TIRE END 110/80.18 | NEUMATICO TRASERO END 110/80.18 |
| 3 | H082 | -- | H082 | -- | CHAMBRE AR SM 400 X 17 | REAR INNER TUBE SM 400 X 17 | CAMARA TRASERA SM 400 X 17 |
| 4 | -- | H088 | -- | H088 | CHAMBRE AR END 300 X 18 | REAR INNER TUBE END 300 X 18 | CAMARA TRASERA END 300 X 18 |
| 5 | H094 | -- | H094 | -- | JANTE ARR. SM | REAR RIM SM. | LLANTA TRASERA SM |
| 5 | H339 | -- | H339 | -- | JANTE ARR. SM ROUGE | REAR RIM SM RED | LLANTA TRASERA SM ROJO |
| 5 | H341 | -- | H341 | -- | JANTE ARR. SM OR | REAR RIM SM GOLD | LLANTA TRASERA SM ORO |
| 6 | -- | H095 | -- | H095 | JANTE ARR. TRAIL | REAR RIM END | LLANTA TRASERA TRAIL |
| 6 | -- | H375 | -- | -- | JANTE ARR. TRAIL BLEU | REAR RIM BLUE | LLANTA TRASERA TRAIL AZUL |
| 7 | H096 | -- | H096 | -- | RAYON ARR SM 196 X 3.08 | SPOKE REAR SM 196 X 3.08 | RADIO TRAS SM 196 X 3.08 |
| 8 | H336 | -- | H336 | -- | RAYON ARR SM 197 X 3.08 | SPOKE REAR SM 197 X 3.08 | RADIO TRAS SM 197 X 3.08 |
| 9 | -- | H098 | -- | H098 | RAYON ARR. TRAIL 210 X 3.08 | REAR SPOKE END 210 x 3.08 | RADIO TRASERO TRAIL 210 X 3.08 |
| 10 | -- | H335 | -- | H335 | RAYON ARR. TRAIL 214 X 3.08 | REAR SPOKE END 214 X 3.08 | RADIO TRASERO TRAIL 214 X 3.08 |
| 11 | H079 | H079 | H079 | H079 | FOND DE JANTE | RIM RUBBER BAND | PROTECTOR LLANTA |
| 12 | H090 | H090 | H090 | H090 | MOYEU ARR. HRD | REAR HUB HRD | BUJE TRASERO HRD |
| 13 | R362 | R362 | R362 | R362 | ROULEMENT MOYEU AR | BEARING REAR HUB | RODAMIENTO BUJE TRASERO |
| 14 | R363 | R363 | R363 | R363 | ENTRETOISE MOYEU INTERNE | REAR HUB SPACER | SEPARADOR BUJE TRASERO |
| 15 | H115 | H115 | H115 | H115 | ENTRETOISE ROUE ARR. | REAR WHEEL SPACER | CASQUILLO RUEDA TRASERA |
| 16 | H119 | H119 | H119 | H119 | AXE DE ROUE | REAR WHEEL AXLE | EJE RUEDA TRASERA |
| 17 | H100 | H100 | H100 | H100 | DISQUE ARR. | REAR DISK BRAKE | DISCO FRENO TRASERO |
| 18 | H104 | H104 | H104 | H104 | VIS DISQUE | BRAKE DISC SCREW | TORNILLO DE DISCO DE FRENO 8*20 |
| 19 | -- | -- | H105 | H105 | CHAINE 126 M CITY CORP | CHAIN 126 M CITY CORP | CADENA 126 M CITY CORP |
| 20 | H106 | H106 | -- | -- | CHAINE 134 M END | CHAIN 134 ENDURO | CADENA 134 ENDURO |
| 21 | H108 | H108 | H250 | H250 | COURONNE 56 dts | REAR SPROCKET 56 Z | CORONA 56 Z |

# Roue arriere / Rear wheel / Rueda trasera

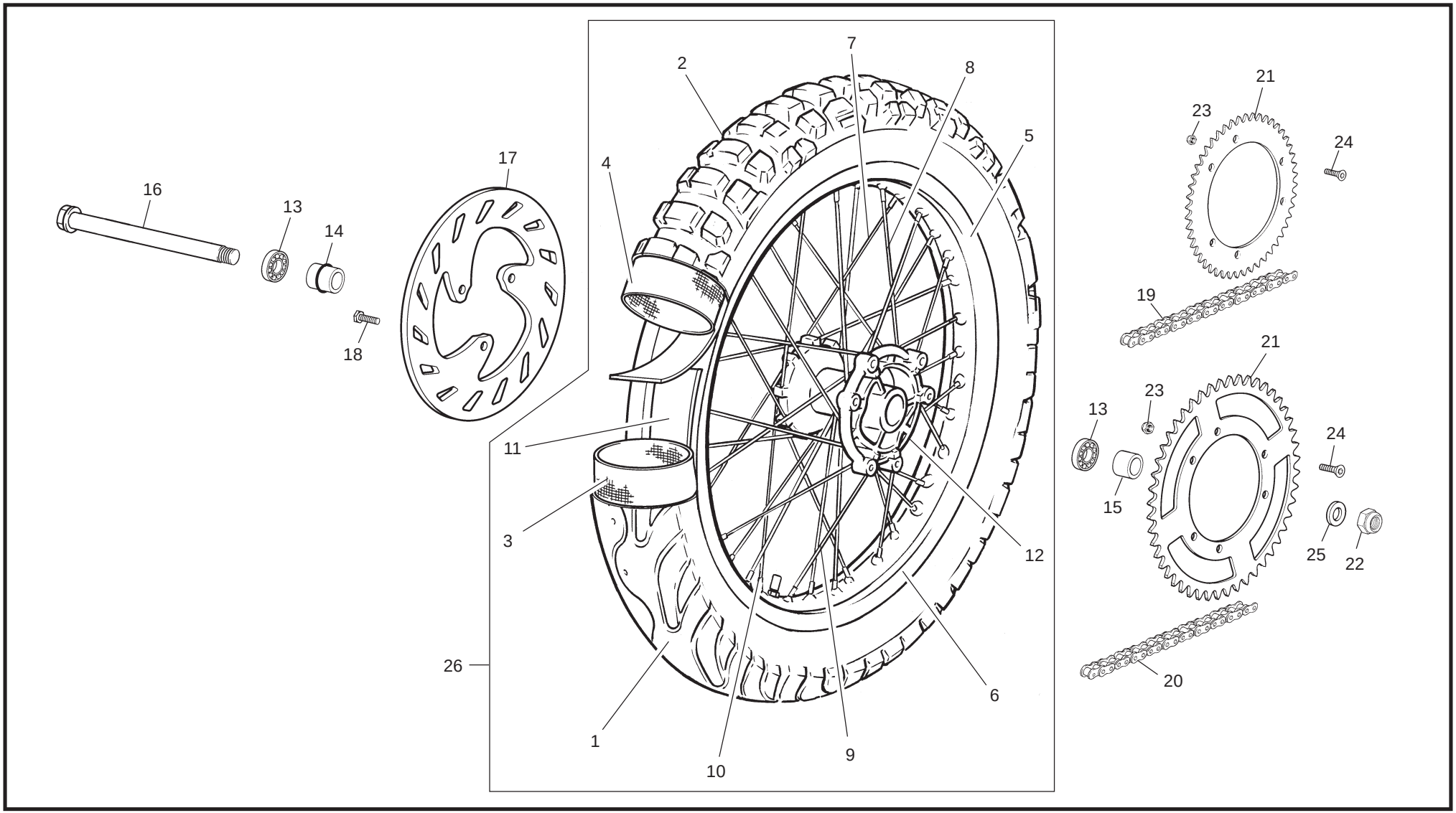

# Roue arriere / Rear wheel / Rueda trasera

| POS. | 50 SM | 50 END | 125 SM | 125 END | FRANÇAIS | ENGLISH | ESPAÑOL |
|---|---|---|---|---|---|---|---|
| 22 | C417 | C417 | C417 | C417 | ECROU NYLSTOP M16*150 | NUT NYLSTOP M16*150 | TUERCA NYLSTOP M16*150 |
| 23 | M305 | M305 | M305 | M305 | ECROU NYLSTOP M8 | NUT NYLSTOP M8 | TUERCA NYLSTOP M8 |
| 24 | C460 | C460 | C460 | C460 | VIS TH M8*35 | SCREW TH M8*35 | TORNILLO TH M8*35 |
| 25 | C426 | C426 | C426 | C426 | RONDELLE M16 | WASHER M16 | ARANDELA M16 |
| 26 | H270 | -- | H270 | -- | ROUE AR SM COMPLETE | REAR WHEEL SM COMPLETE | RUEDA TRASERA SM COMPLETA |
| 26 | H343 | -- | H343 | -- | ROUE AR SM ROUGE COMPLETE | REAR WHEEL SM RED COMPLETE | RUEDA TRASERA SM ROJO COMPLETA |
| 26 | H345 | -- | H345 | -- | ROUE AR SM OR COMPLETE | REAR WHEEL SM GOLD COMPLETE | RUEDA TRASERA SM ORO COMPLETA |
| 26 | -- | H272 | -- | H272 | ROUE AR END COMPLETE | REAR WHEEL END COMPLETE | RUEDA TRAS END COMPLETA |

# Guidon / Handlebar / Manillar

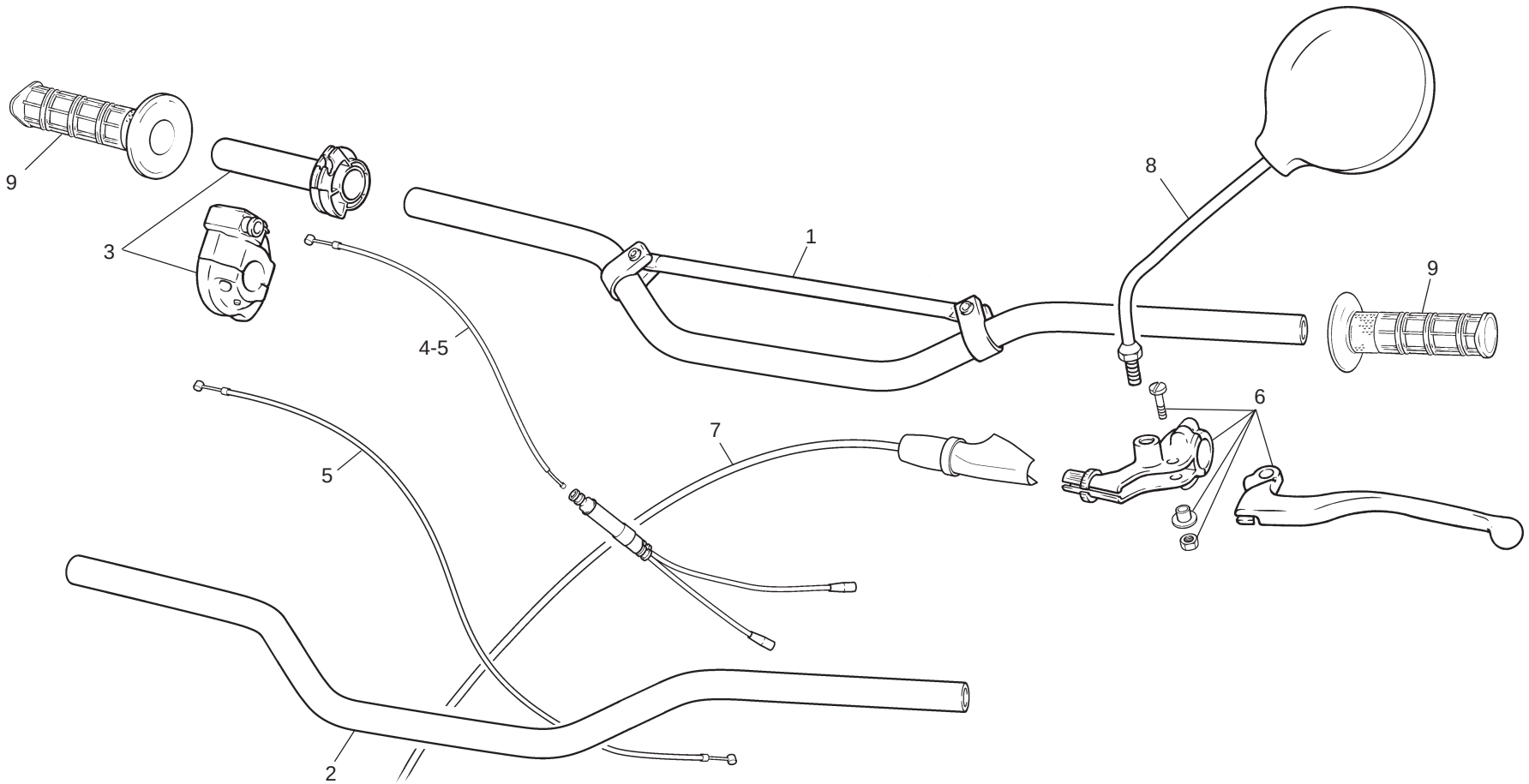

# Guidon / Handlebar / Manillar

| POS. | 50 SM | 50 END | 125 SM | 125 END | FRANÇAIS | ENGLISH | ESPAÑOL |
|---|---|---|---|---|---|---|---|
| 1 | -- | H208 | -- | H208 | GUIDON END | TRAIL HANDLEBAR | MANILLAR TRAIL |
| 2 | H210 | -- | H210 | .. | GUIDON SM | HANDLEBAR SM | MANILLAR SM |
| 3 | H213 | H213 | C074 | C074 | POIGNET DE GAZ | THROTTLE CONTROL | MANDO GAS |
| 4 | H142 | H142 | H139 | H139 | CABLE DE GAZ | THROTTLE CABLE | CABLE DE GAS |
| 5 | H143 | H143 | .. | .. | CABLE DE GAZ CATA | THROTTLE CABLE CATALYST | CABLE DE GAS CATALIZ. |
| 6 | H221 | H221 | H221 | H221 | COCOTTE EMBRAYAGUE COMPL | CLUTCH CONTROL COMPLETE | MANDO EMBRAGUE COMPLETO |
| 7 | H144 | H144 | H140 | H140 | CABLE EMBRAYAGE | CLUTCH CABLE | CABLE EMBRAGUE |
| 8 | H218 | H218 | H218 | H218 | RETROVISEUR G REVERSIBLE M10 | LEFT MIRROR | RETROVISOR IZQUIERDO |
| 9 | 0534 | 0534 | 0534 | 0534 | POIGNETS CAOUTCHOUC | HANDLEBAR GRIP | PUÑO |

# Plastiques / Plastics / Plásticos

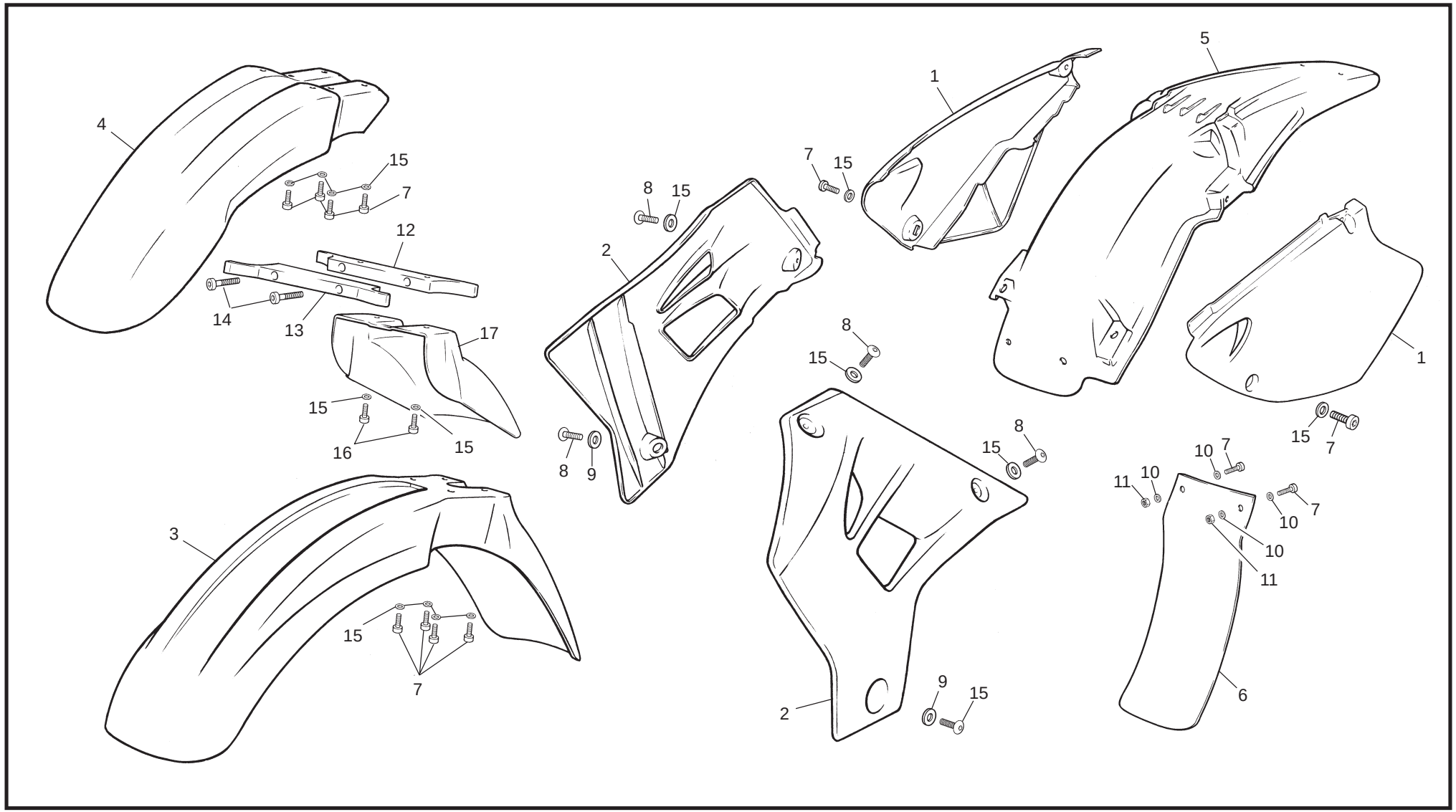

# Plastiques / Plastics / Plásticos

| POS. | 50 SM | 50 END | 125 SM | 125 END | FRANÇAIS | ENGLISH | ESPAÑOL |
|---|---|---|---|---|---|---|---|
| 1 | H015 | -- | H015 | -- | PLAQUE LATERALE PAIRE GRIS END | SIDE COVERS SET ENDURO GREY | JUEGO TAPAS LATERALES ENDURO GRIS |
| 2 | H274 | H274 | H274 | H274 | OUIE PAIRE NOIRE END | RADIATOR COVER END | JUEGO TAPAS RADIADOR END BLACK |
| 3 | H239 | -- | -- | -- | GARDE BOUE AV BLEU SM | FRONT FENDER BLUE SM | GUARDABARROS DEL. AZUL SM |
| 3 | H242 | -- | -- | -- | GARDE BOUE AV ROUGE SM | FRONT FENDER RED SM | GUARDABARROS DEL. ROJO SM |
| 3 | H024 | -- | H024 | -- | GARDE BOUE AV GRIS SM | FRONT FENDER GRAY SM | GUARDABARROS DEL. GRIS SM |
| 4 | -- | H235 | -- | -- | GARDE BOUE AV ROUGE END | FRONT FENDER RED END | GUARDABARROS DEL. ROJO END |
| 4 | -- | H236 | -- | -- | GARDE BOUE AV BLEU END | FRONT FENDER BLUE END | GUARDABARROS DEL. AZUL END |
| 4 | -- | H023 | -- | H023 | GARDE BOUE AV GRIS END | FRONT FENDER GRAY SM | GUARDABARROS DEL. GRIS END |
| 5 | H014 | H014 | H014 | H014 | GARDE BOUE AR GRIS | REAR FENDER GRAY | GUARDABARROS TRASERO GRIS |
| 6 | H025 | H025 | H025 | H025 | BAVETTE AM | REAR SHOCK COVER | PROTECTOR AMORTIGUADOR |
| 7 | M251 | M251 | M251 | M251 | VIS CHC M6*16 | SCREW CHC M6*16 | TORNILLO M6*16 DIN 912 |
| 8 | M283 | M283 | M283 | M283 | VIS BHC M6*20 | SCREW BHC M6*20 | TORNILLO M6*16 ULS |
| 9 | C429 | C429 | C429 | C429 | RONDELLE M6*25 | WASHER M6*25 | ARANDELA M6*25 |
| 10 | M317 | M317 | M317 | M317 | RONDELLE M6*12 | WASHER M6*12 | ARANDELA M6*12 |
| 11 | M306 | M306 | M306 | M306 | ECROU NYLSTOP M6 | NUT NYLSTOP M6 | TUERCA NYLSTOP M6 |
| 12 | H117 | -- | H117 | -- | DEMI FIX AR GB SM | FENDER SUPPORT BRACKET (REAR) | MITAD TRAS. PUENTE DELANT. SM. |
| 13 | H116 | -- | H116 | -- | DEMI FIX AV GB SM | FENDER SUPPORT BRACKET (FRONT) | MITAD DEL. PUENTE DELANT. SM. |
| 14 | C408 | -- | C408 | -- | VIS CHC M5*30 | SCREW CHC M5*30 | TORNILLO M5*30 DIN 912 |
| 15 | C427 | -- | C427 | -- | RONDELLE M6*15 | WASHER M6*15 | ARANDELA M6*15 |
| 16 | C409 | -- | C409 | -- | VIS CHC M6*10 | SCREW CHC M6*10 | TORNILLO M6*10 DIN 912 |
| 17 | H029 | -- | H029 | -- | DEMIE GB SM | FRONT HALF FENDER SM | SEMI-GUARDABARO SM. |

# Adhesif / Sticker / Adhesivo

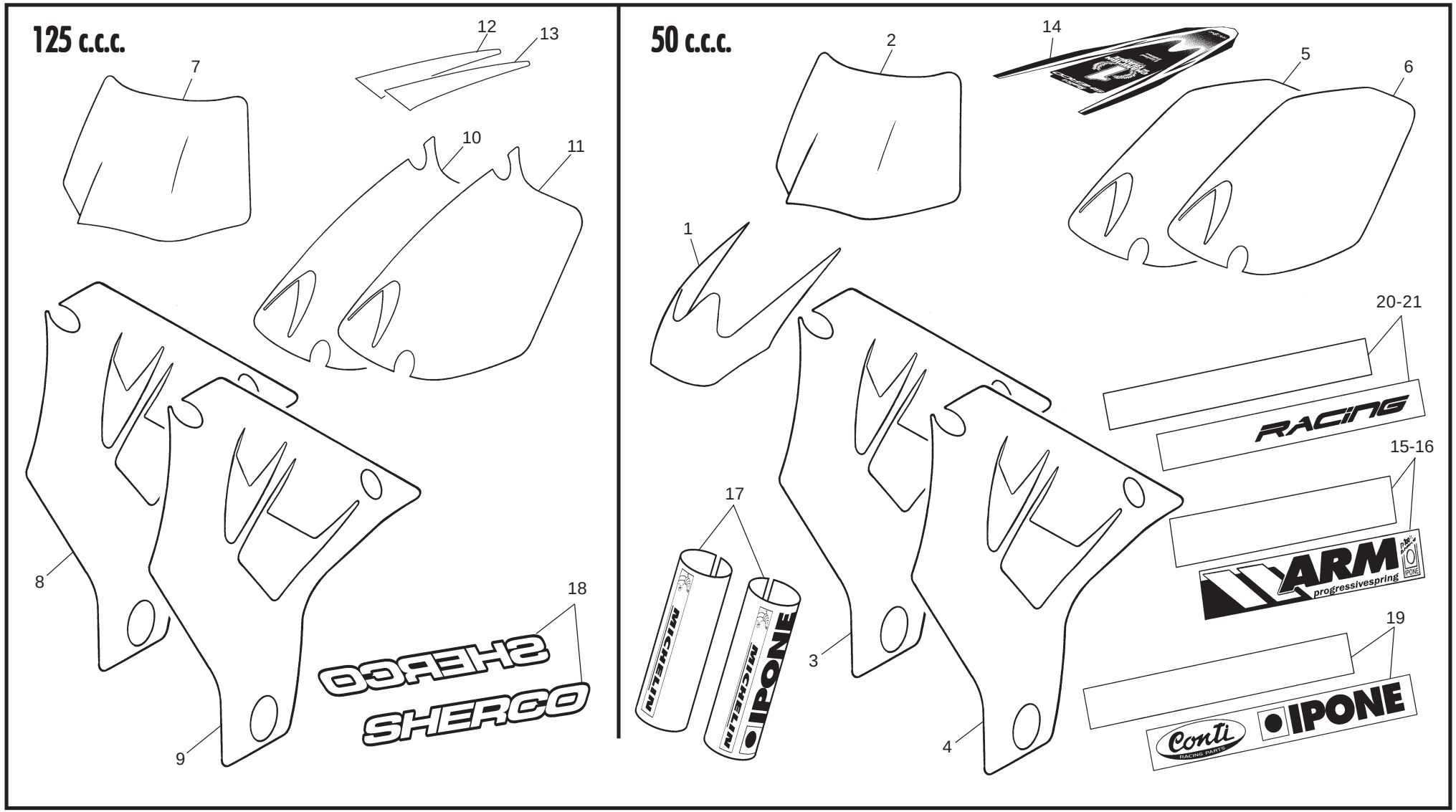

# Adhesif / Sticker / Adhesivo

| POS. | 50 SM | 50 END | 125 SM | 125 END | FRANÇAIS | ENGLISH | ESPAÑOL |
|---|---|---|---|---|---|---|---|
| 1 | H286 | H286 | -- | -- | ADHESIF GB AV BLEU 50 | STICKER FRONT FENDER BLUE 50 END | ADH. GB DEL. AZUL 50 / CHF |
| 1 | H287 | H287 | -- | -- | ADHESIF GB AV ROUGE 50 | STICKER FRONT FENDER RED 50 END | ADH. GB DEL. ROJO 50 / IPONE |
| 1 | H288 | H288 | -- | -- | ADHESIF GB AV GRIS 50 | STICKER FRONT FENDER GRAY 50 END | ADH. GB DEL. GRIS 50 |
| 1 | H358 | H358 | -- | -- | ADHE. GB. AV. 50 SHARK | STICKER FRONT FENDER 50 SHARK | ADH. GB DEL. 50 SHARK |
| 2 | H289 | H289 | -- | -- | ADHESIF PLAQUE PHARE BLEU 50 | STICKER FRONT LIGHT BLUE 50 END | ADH. PLACA FARO AZUL 50 |
| 2 | H290 | H290 | -- | -- | ADHESIF PLAQUE PHARE ROUGE 50 | STICKER FRONT LIGHT RED 50 END | ADH. PLACA FARO ROJO 50 |
| 2 | H291 | H291 | -- | -- | ADHESIF PLAQUE PHARE GRIS 50 | STICKER FRONT LIGHT GRAY 50 END | ADH. PLACA FARO GRIS 50 |
| 2 | H301 | H301 | H301 | -- | ADHESIF PLAQUE PHARE IPONE | STICKER FRONT LIGHT IPONE SM | ADH. PLACA FARO IPONE |
| 2 | H311 | H311 | -- | -- | ADHESIF PLAQUE PHARE CHF SM | STICKER FRONT LIGHT CHF SM | ADH. PLACA FARO CHR SM |
| 2 | H359 | H359 | -- | -- | ADHESIF PLAQUE PHARE 50 SHARK | STICKER FRONT LIGHT 50 SHARK | ADH. PLACA FARO 50 SHARK |
| 3 | H278 | H278 | -- | -- | ADHESIF OUIE DR. BLEU 50 | CHANGE R. BLUE 50 END | ADH. TAPA RAD. DER. AZUL 50 END/CHF |
| 3 | H279 | H279 | -- | -- | ADHESIF OUIE DR. ROUGE 50 | CHANGE R.RED 50 END | ADH. TAPA RADIA. DER. ROJO 50 END |
| 3 | H280 | H280 | -- | -- | ADHESIF OUIE DR. GRIS 50 | CHANGE R. GRAY 50 END | ADH. TAPA RADIA. DER. PLATA 50 END |
| 3 | H302 | H302 | H302 | -- | ADHESIF OUIE DR. IPONE | CHANGE R. IPONE SM | ADH. TAPA RAD. DER. IPONE + CITY |
| 3 | H361 | H361 | -- | -- | ADHESIF OUIE DROITE 50 SHARK | CHANGE R. 50 SHARK | ADH. TAPA RAD. DER. 50 SHARK |
| 4 | H281 | H281 | -- | -- | ADHESIF OUIE GAU. BLEU 50 | CHANGE R. BLUE 50 END | ADH. TAPA RAD. IZ. AZUL 50 END/CHF |
| 4 | H282 | H282 | -- | -- | ADHESIF OUIE GAU. ROUGE 50 | CHANGE RODIATOR TO RADIATOR | ADH. TAPA RADIADOR IZ. ROJO 50 END |
| 4 | H303 | H303 | H303 | -- | ADHESIF OUIE GAU. IPONE | CHANGE L. IPONE SM | ADH. PLACA RADIADOR IZ. IPONE |
| 4 | H283 | H283 | -- | -- | ADHESIF OUIE GAU. GRIS 50 END | STICKER RADIATOR CO. L. GRAY 50 END | ADH. TAPA RADIADOR IZ. PLATA 50 END |
| 4 | H360 | H360 | -- | -- | ADHESIF OUIE GAU. 50 SHARK | STICKER RADIATOR L. 50 SHARK | ADH. TAPA RADIADOR IZ. 50 SHARK |
| 5 | H284 | H284 | -- | -- | ADHESIF PLAQUE LATE. DROITE 50 | STICKER SIDE COVER R 50 END | ADH. TAPA LATERAL DER. 50 END |
| 5 | H305 | H305 | H305 | -- | ADHESIF PLAQUE NO DR. IPONE | STICKER SIDE COVER R IPONE SM | ADH. PLACA NO DER. IPONE |
| 5 | H309 | H309 | -- | -- | ADHESIF PLAQUE NO CHF SM DR | STICKER SIDE COVER R CHF SM | ADH. PLACA NO CHF SM DER |
| 5 | H362 | H362 | -- | -- | ADHESIF PLAQUE NO DR. SHARK | STICKER SIDE COVER SHARK | ADH. PLACA NO DER. SHARK |
| 6 | H310 | H310 | -- | -- | ADHESIF PLAQUE NO CHF SM GA | STICKER SIDE COVER L. CHF SM | ADH. PLACA NO CHF SM IZQ. |

# Adhesif / Sticker / Adhesivo

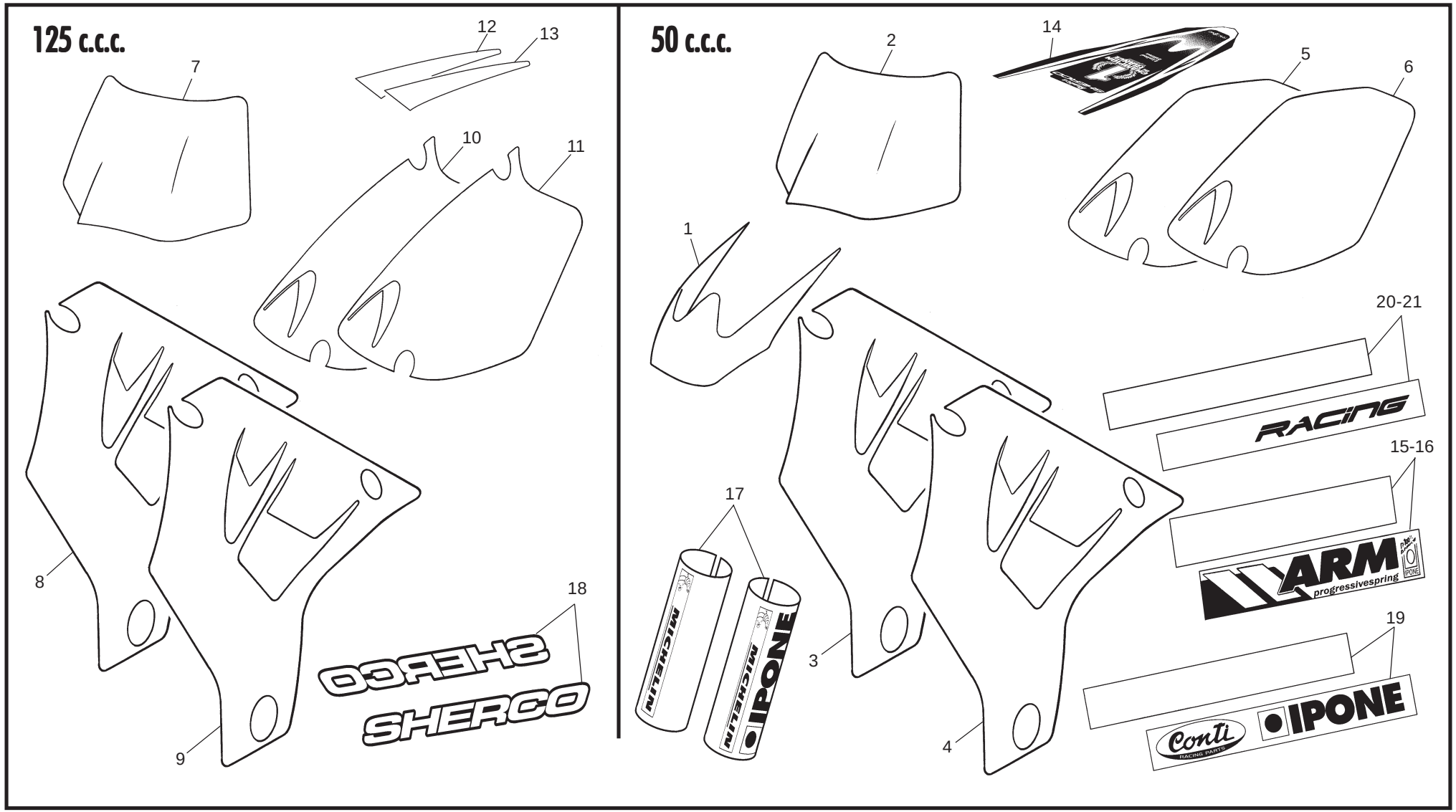

# Adhesif / Sticker / Adhesivo

| POS. | 50 SM | 50 END | 125 SM | 125 END | FRANÇAIS | ENGLISH | ESPAÑOL |
|---|---|---|---|---|---|---|---|
| 6 | H306 | H306 | H306 | -- | ADHESIF PLAQUE NO GA. IPONE | STICKER SIDE COVER L. IPONE SM | ADH. PLACA NO IZ. IPONE |
| 6 | H285 | H285 | -- | -- | ADHESIF PLAQUE LAT. GAUCHE 50 | STICKER SIDE COVER L 50 END | ADH. TAPA LATERAL IZQ. 50 END |
| 6 | H363 | H363 | -- | -- | ADHESIF PLAQUE NO GAU. SHARK | STICKER SIDE COVER SHARK | ADH. TAPA LATERAL IZQ. SHARK |
| 7 | -- | -- | H257 | H257 | ADHESIF PLAQUE PHARE 125 CITY CORP | STICKER RADIATOR COVER L GRAY | ADH. PLACA FARO 125 CITY CORP |
| 8 | -- | -- | H321 | H321 | ADHESIF OUIE DR 125 CITY | RADIATOR STICKER RI. 125 CITY CORP | ADH. PLACA RADI. DER. 125 CITY CORP |
| 9 | -- | -- | H322 | H322 | ADHE. OUIE GAUCHE 125 CITY | RADIATOR STICKER LEFT 125 CITY CORP | ADH. PLACA RADI. 125 CITY CORP |
| 10 | -- | -- | H323 | H323 | ADHE. PLA. NO DROITE 125 CITY | STICKER SIDE COVER R. 125 | ADH. PLACA NO DER. 125 CITY CORP |
| 11 | -- | -- | H324 | H324 | ADHE. PLA. NO GAUCHE 125 CITY | STICKER SIDE COVER L. 125 | ADH. GB AR. DER. 125 CITY CORP |
| 12 | -- | -- | H325 | H325 | ADHE. PARE BOUE AR DR 125 CITY | FENDER BACK STICKER RIGHT | ADH. PLACA NO IZQ. 125 CITY CORP |
| 13 | -- | -- | H326 | H326 | ADHE. PARE BOUE AR GA 125 CITY | FENDER BACK STICKER LEFT | ADH. GB TRAS. IZQ 125 CITY CORP |
| 14 | H312 | H312 | -- | -- | ADHESIF GB AR CHF SM | STICKER FENDER CHF SM | ADH. GB TRAS. CHF SM |
| 14 | H304 | H304 | H304 | -- | ADHESIF PARE BOUE AR IPONE LIMITED | STICKER REAR FENDER IPONE | ADH. GB TRAS IPONE LIMITED |
| 14 | H364 | H364 | -- | -- | ADHE. GB. AR. 50 SHARK | STICKER FENDER 50 SHARK | ADH.GB TRAS. 50 SHARK |
| 15 | H295 | H295 | -- | -- | ADHESIF BRAS DROITE BLEU 50 | STICKER SWINGARM BLUE 50 END | ADH. BASCULANTE DER. AZUL 50 END |
| 15 | H296 | H296 | -- | -- | ADHESIF BRAS DROITE ROUGE 50 | STIKER SWINGARM R. RED 50 END | ADH. BASCULANTE DER. ROJO 50 END |
| 15 | H297 | H297 | -- | -- | ADHESIF BRAS DROITE GRIS 50 | STICKER SWINGARM R. GRAY 50 END | ADH. BASCULANTE DER. PLATA 50 END |
| 16 | H292 | H292 | -- | -- | ADHESIF BRAS GAUCHE BLEU 50 | STICKER SWINGARM L. BLUE 50 END | ADH. BASCULANTE IZ. AZUL 50 END |
| 16 | H293 | H293 | -- | -- | ADHESIF BRAS GAUCHE ROUGE 50 | STIKER SWINGARM L. RED 50 END | ADH. BASCULANTE IZ. ROJO 50 END |
| 16 | H294 | H294 | -- | -- | ADHESIF BRAS GAUCHE GRIS 50 | STICKER SWINGARM L. GRAY 50 END | ADH. BASCULANTE IZ. PLATA 50 END |
| 17 | H313 | H313 | -- | -- | ADH. FOURCHE IPONE MICHELIN PAIRE | STICKER FORK IPONE MICHELIN PAIR | ADH. HORQ. IPONE MICHELIN JU/CHF |
| 18 | -- | -- | H307 | H307 | ADHESIF SHERCO BRAS | STCKER SHERCO SWINGARM | ADHESIVO SHERCO BASCULANTE |
| 19 | H308 | H308 | -- | -- | ADHESIF BRAS CONTI IPONE PAIRE | SWINGARM STICKER CONTI IPONE PAIR | JUEG. ADH. BASCU. CONTI IPONE/CHF |
| 20 | H365 | H365 | -- | -- | ADHESIF BRAS DROITE 50 SHARK | STICKER SWINGARM R. 50 SHARK | ADH. BASCULANTE DER. 50 SHARK |
| 21 | H366 | H366 | -- | -- | ADHESIF BRAS GAUCHE 50 SHARK | STICKER SWINGARM L. 50 SHARK | ADH. BASCULANTE IZQ. 50 SHARK |

# Selle / Seat / Sillín

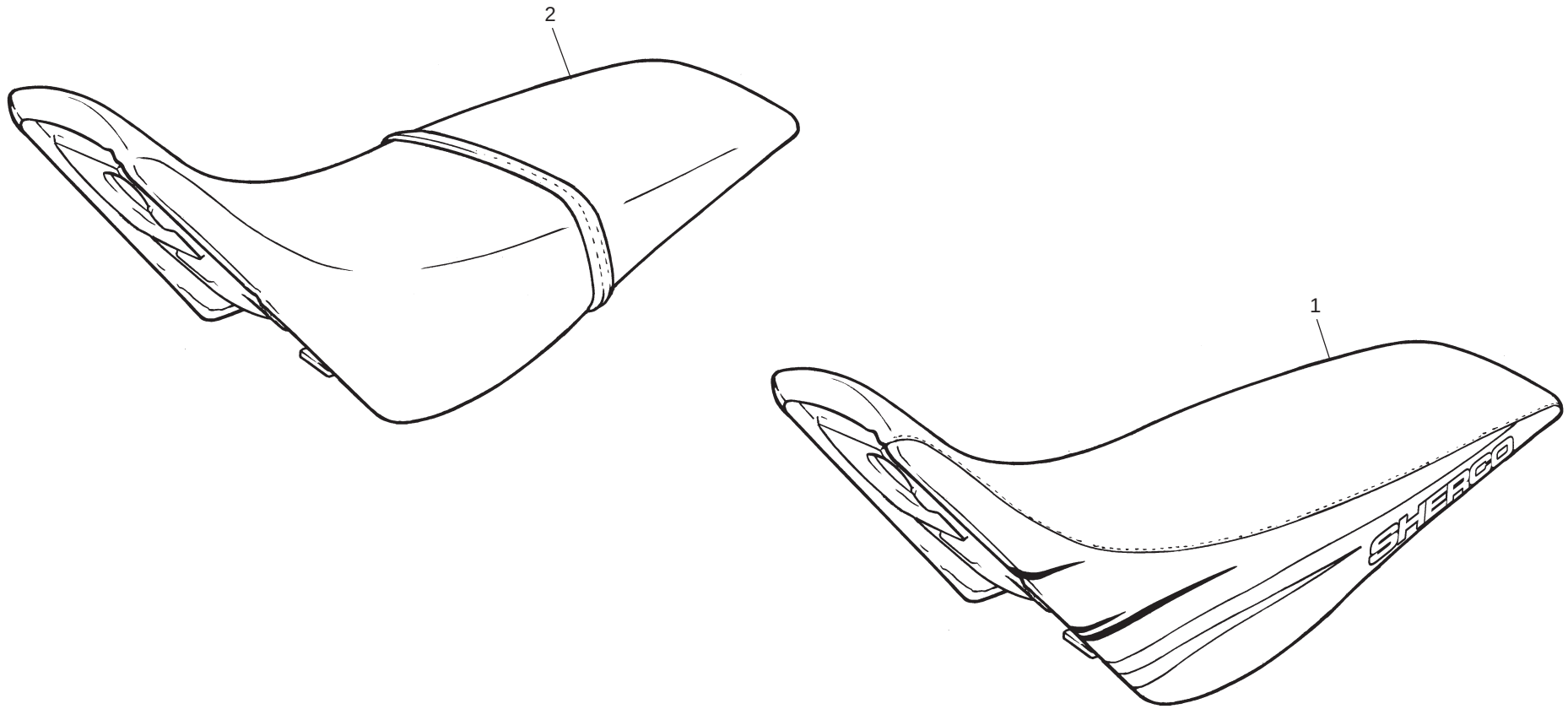

# Selle / Seat / Sillín

| POS. | 50 SM | 50 END | 125 SM | 125 END | FRANÇAIS | ENGLISH | ESPAÑOL |
|---|---|---|---|---|---|---|---|
| 1 | H229 | H229 | -- | -- | SELLE ROUGE | SEAT RED | ASIENTO ROJO |
| 1 | H230 | H230 | -- | -- | SELLE GRISE | SEAT GRAY | ASIENTO GRIS |
| 1 | H062 | H062 | -- | -- | SELLE BLEU | 50 ENDURO BLUE SEAT | ASIENTO AZUL |
| 2 | H061 | -- | H061 | H061 | SELLE NOIRE SANGLE | BLACK SEAT WITH HANDLE | ASIENTO NEGRO CON ASA |

# Moteur / Engine / Motor 50

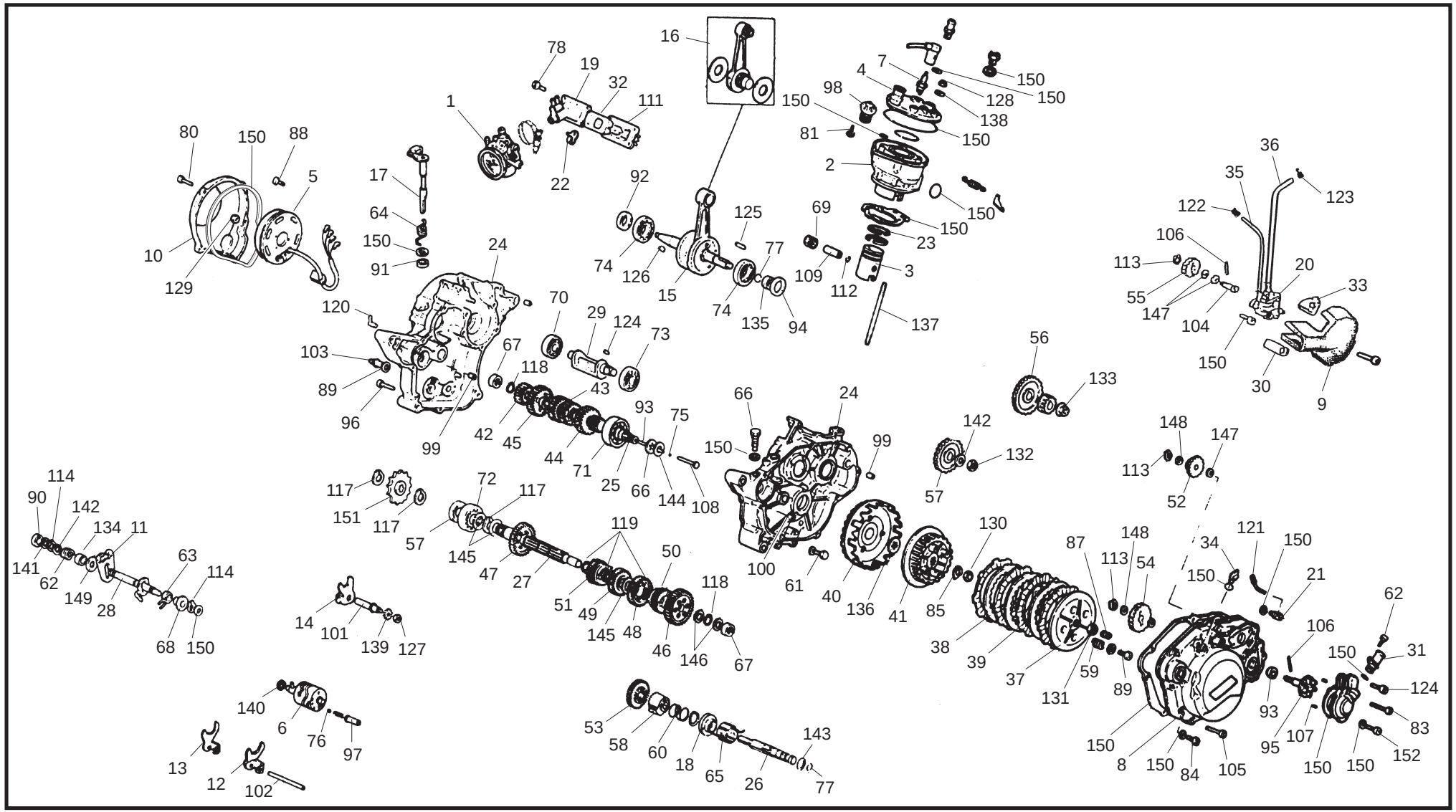

# Moteur / Engine / Motor 50

| POS. | QTS. | 50 SM | 50 END | FRANÇAIS | ENGLISH | ESPAÑOL |
|---|---|---|---|---|---|---|
| 1 | 1 | Y021 | Y021 | CARBURATEUR SHA 14-12 MR 2234 | CARBURETOR SHA 14-12 MR 2234 | CARBURADOR SHA 14-12 MR 2234 |
| 1 | 1 | Y022 | Y022 | CARBURATEUR PHBN 12 HS 31 28 | CARBURETOR PHBN 12 HS 31 28 | CARBURADOR PHBN 12 HS 31 28 |
| 2 | 1 | Y023 | Y023 | CYLINDRE D40.3 112 RAF LIQUIDE | CYLINDER | CILINDRO |
| 3 | 1 | Y185 | Y185 | PISTON D 40.3 | PISTON | PISTÓN |
| 4 | 1 | Y202 | Y202 | CULASSE | HEAD CYLINDER | CULATA |
| 5 | 1 | Y207 | Y207 | ALLUMAGE DUCATI | CDI MAGNETO ASSY | ENCENDIDO COMPLETO |
| 6 | 1 | Y017 | Y017 | BARRILLET VITESSE | SHIFT CAM | TAMBOR DE SELECCIÓN |
| 7 | 1 | Y018 | Y018 | BOUGIE NGK BR9 ES | SPARKPLUG | BUJÍA |
| 8 | 1 | Y025 | Y025 | COUVERCLE CARTER EMBRA. | COVER CLUTCH SIDE | TAPA CÁRTER |
| 9 | 1 | Y026 | Y026 | COUVERCLE PPE HUILE | COVER OIL PUMP | TAPA BOMBA ACEITE |
| 10 | 1 | Y027 | Y027 | COUVERCLE CARTER ALLUMAGE | COVER FLYWEEL SIDE | TAPA CÁRTER ENCENDIO |
| 11 | 1 | Y044 | Y044 | FOURCHETTE AXE SELECTEUR | FORK SHAFTAXLE | HORQUILLA EJE SELECTOR |
| 12 | 1 | Y041 | Y041 | FOURCHETTE | FORK | HORQUILLA |
| 13 | 1 | Y042 | Y042 | FOURCHETTE | FORK | HORQUILLA |
| 14 | 1 | Y043 | Y043 | FOURCHETTE | FORK | HORQUILLA |
| 15 | 1 | Y048 | Y048 | EMBIELLAGE COMPLET | CRANKSHAFT ASSY | CONJUNTO CIGÜEÑAL |
| 16 | 1 | Y049 | Y049 | KIT BIELLE | KIT CONNECTING ROD | KIT BIELA |
| 17 | 1 | Y070 | Y070 | LEVIER EMBRAYAGE | PUSH LEVER ASSY | LEVA EMBRAGUE |
| 18 | 1 | Y080 | Y080 | MOYEU RESSORT KICK | SPRING TORSION HUB | GUÍA MUELLE ARRANQUE |
| 19 | 1 | Y184 | Y184 | PIPE ADMISSION ALUMINIUM | MANIFOLD ALU. | TOBERA ADMISIÓN ALUMINIO |
| 19 | 1 | Y211 | Y211 | PIPE ADMISSION PLASTIQUE | MANIFOLD PLASTIC | TOBERA ADMISIÓN PLÁSTICO |
| 20 | 1 | Y186 | Y186 | PPE HUILE DELLORTO PLBD38 | OIL PUMP | BOMBA ACEITE |
| 21 | 1 | Y188 | Y188 | TENDEUR CABLE PPE HUILE | HOLDER | TENSOR CABLE |
| 22 | 1 | Y187 | Y187 | ARRET CABLE EMBRAYAGE | HOLDER | TOPE CABLE EMBRAGUE |

# Moteur / Engine / Motor 50

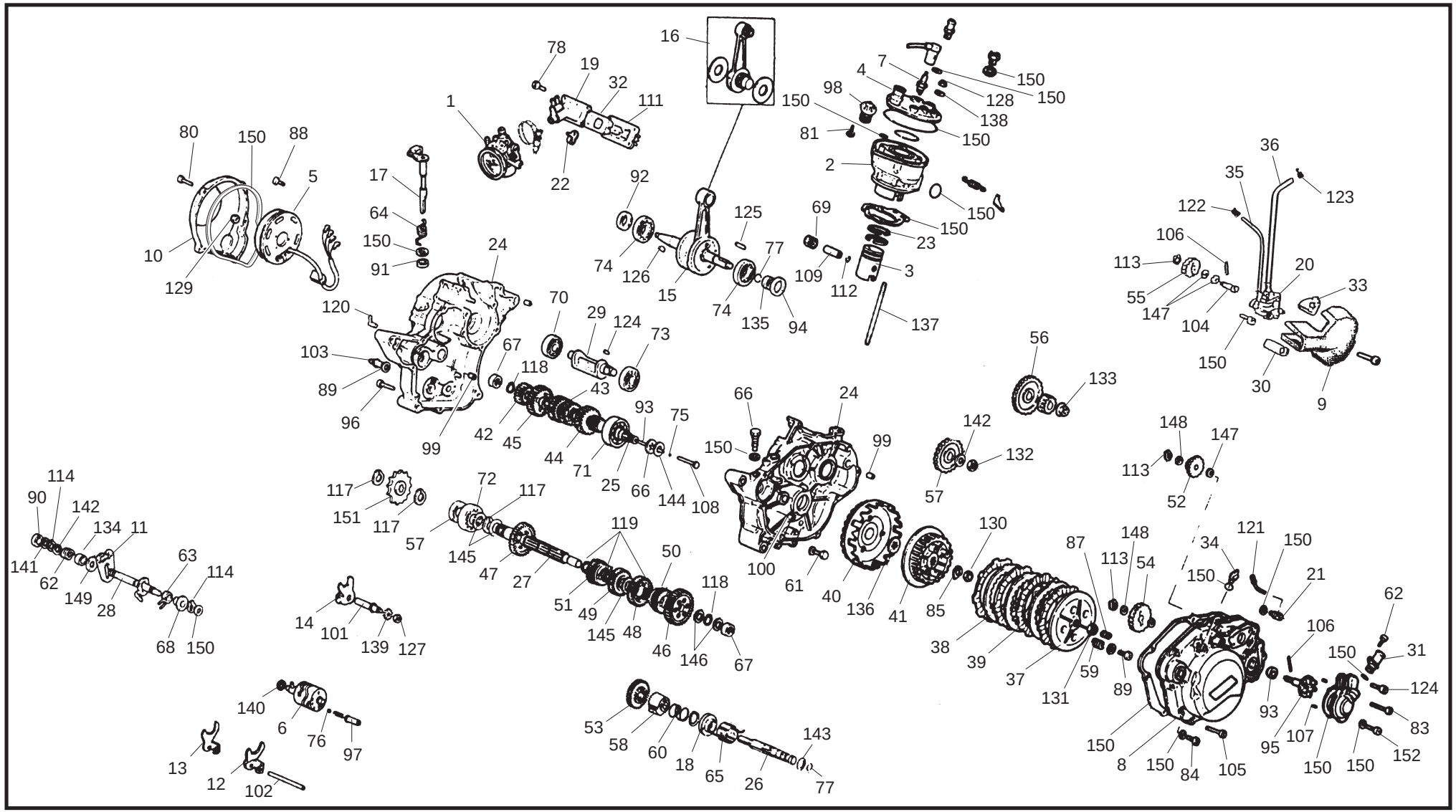

# Moteur / Engine / Motor 50

| POS. | QTS. | 50 SM | 50 END | FRANÇAIS | ENGLISH | ESPAÑOL |
|---|---|---|---|---|---|---|
| 23 | 1 | Y196 | Y196 | SEGMENTD 40.3*1; 2 | PISTON RIING SET STD | ARO |
| 24 | 1 | Y189 | Y189 | CARTER MOTEUR | CRANKCASE ASSY | CÁRTER MOTOR |
| 25 | 1 | Y002 | Y002 | ARBRE PRIMAIRE | AXLE MAIN | EJE PRIMARIO |
| 26 | 1 | Y001 | Y001 | ARBRE DE KICK | KICK STARTER SHAFT | EJE ARRANQUE |
| 27 | 1 | Y003 | Y003 | ARBRE SECONDAIRE | AXLE DRIVE | EJE SEGUNDARIO |
| 28 | 1 | Y004 | Y004 | ARBRE SELECTEUR | SHIFT SHAFT | EJE SELECTOR |
| 29 | 1 | Y005 | Y005 | BALANCIER | BALANCER | EJE DE EQUILIBRADO |
| 30 | 1 | Y030 | Y030 | PASSE CABLE PPE HUILE | GROMMET | PASA CABLES |
| 31 | 1 | Y032 | Y032 | RACCORD SORTIE PPE EAU | WATER PUMP CONNECTOR | RACORD SALIDA BOMBA AGUA |
| 32 | 1 | Y033 | Y033 | STARTER | STUFFER | STARTER |
| 33 | 1 | Y031 | Y031 | PASSE FIL PPE HUILJE | GROMMET | PASA CABLES |
| 34 | 1 | Y038 | Y038 | BOUCHON REMPLISSAGE HUILE | OIL FILLER CAP | TAPÓN LLENADO ACEITE |
| 35 | 1 | Y034 | Y034 | TUBE SORTIE HUILE L 190 | HOSE OIL | TUBO SALIDA ACEITE |
| 36 | 1 | Y035 | Y035 | TUBE ENTREE HUILE L 345 | HOSE OIL | TUBO ENTRADA ACEITE |
| 37 | 1 | Y046 | Y046 | PLAQUE PRESSION EMBRAYAGE | PRESSURE PLATE | PLACA PRESIÓN EMBRAGUE |
| 38 | 3 | Y045 | Y045 | DISQUE EMBRAYAGE LISSE | PLATE CLUTCH | DISCO LISO |
| 39 | 4 | Y047 | Y047 | DISQUE EMBRAYAGE GARNI | FRICTION PLATE | DISCO FORRADO |
| 40 | 1 | Y068 | Y068 | CLOCHE EMBRAYAGE AV PIGN. | CLUTCH BASKET ASSEMBLY | CAMPANA EMBRAGUE CON PIÑÓN |
| 41 | 1 | Y069 | Y069 | NOIX EMBRAYAGE | CLUTCH HUB | MAZA EMBRAGUE |
| 42 | 1 | Y050 | Y050 | PIGNON SECONDE | GEAR 2ND PINION | PIÑÓN 2 |
| 43 | 1 | Y051 | Y051 | PIGNON TROISIEME QUATRIEME | GEAR 3RD/4TH PINION | PIÑÓN 3/4 |
| 44 | 1 | Y052 | Y052 | PIGNON CINQUIEME | GEAR 5TH PINION | PIÑÓN 5 |
| 45 | 1 | Y053 | Y053 | PIGNON SIXIEME | GEAR 6TH PINION | PIÑÓN 6 |
| 46 | 1 | Y054 | Y054 | PIGNON PREMIERE | GEAR 1ST | PIÑÓN 1 |

# Moteur / Engine / Motor 50

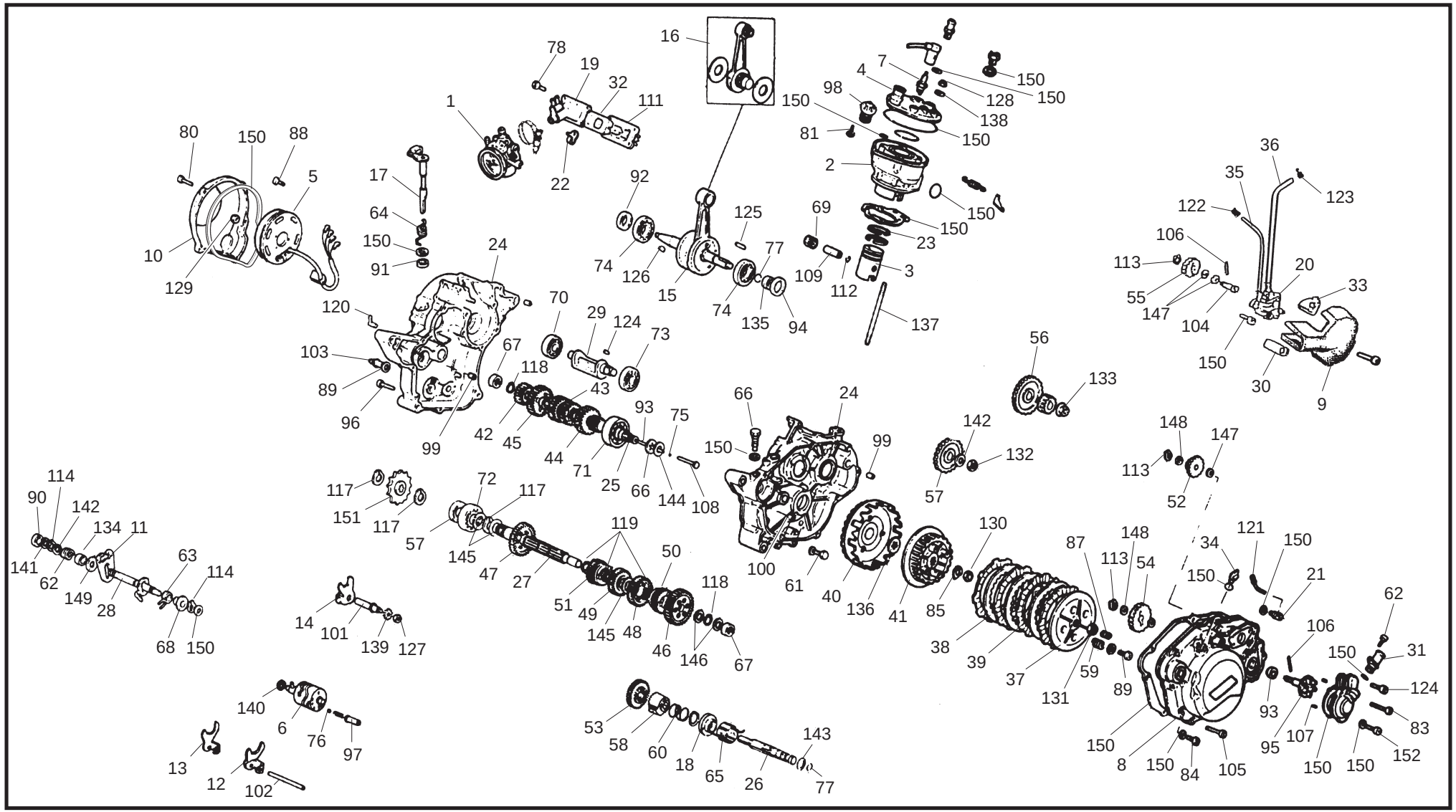

# Moteur / Engine / Motor 50

| POS. | QTS. | 50 SM | 50 END | FRANÇAIS | ENGLISH | ESPAÑOL |
|---|---|---|---|---|---|---|
| 47 | 1 | Y055 | Y055 | PIGNON DEUXIEME | GEAR 2ND | PIÑÓN 2 |
| 48 | 1 | Y056 | Y056 | PIGNON TROISIEME | GEAR 3RD | PIÑÓN 3 |
| 49 | 1 | Y057 | Y057 | PIGNON QUATRIEME | GEAR 4TH | PIÑÓN 4 |
| 50 | 1 | Y058 | Y058 | PIGNON CINQUIEME | GEAR 5TH | PIÑÓN 5 |
| 51 | 1 | Y059 | Y059 | PIGNON SIXIEME | GEAR 6TH | PIÑÓN 6 |
| 52 | 1 | Y060 | Y060 | PIGNON INTERMEDIAIRE | IDLE GEAR | PIÑÓN INTERMEDIO |
| 53 | 1 | Y061 | Y061 | PIGNON ARBRE DE kICK | STARTING GEAR | PIÑÓN EJE ARRANQUE |
| 54 | 1 | Y065 | Y065 | PIGNON PPE | GEAR IMPELLER SHAFT | PIÑÓN BOMBA |
| 55 | 1 | Y064 | Y064 | PIGNON PPE HUILE | PUMP DRIVE GEAR | PIÑÓN BOMBA ACEITE |
| 56 | 1 | Y062 | Y062 | PIGNON ENTRAINEMENT BALA. | GEAR DRIVE | PIÑÓN ENTRONQUE EQUILIBRADO |
| 57 | 1 | Y163 | Y163 | JT SPI ARBRE SECONDAIRE | OIL SEAL | RETÉN EJE SECUNDARIO |
| 58 | 1 | Y066 | Y066 | PIGNON FOU ARBRE DE KICK | KICK START SLIDING GEAR | PIÑÓN LOCO EJE ARRANQUE |
| 59 | 4 | Y072 | Y072 | RESSORT EMBRAYAGE | SPRING PRESSURE | MUELLE EMBRAGUE |
| 60 | 1 | Y073 | Y073 | RESSORT PIGNON FOU ARB KICK | SPRING | MUELLE PIÑÓN LOCO ARRANQUE |
| 61 | 1 | Y121 | Y121 | VIS TH | SCREW HEXAGON HEAD | TORNILLO HEXAGONAL |
| 62 | 1 | Y120 | Y120 | VIS BTR | SCREW BTR | TORNILLO DIN 912 |
| 63 | 1 | Y075 | Y075 | RESSORT RAPPEL AXE SELECT | SPRING | MUELLE EJE SELECTOR |
| 64 | 1 | Y076 | Y076 | RESSORT RAP CDT EMBRAYAGE | SPRING TORSION | MUELLE LEVA EMBRAGUE |
| 65 | 1 | Y077 | Y077 | RESSORT RAPPEL KICK | SPRING | MUELLE ARRANQUE |
| 66 | 1 | Y078 | Y078 | RONDELLE RESSORT | WASHER CONICAL SPRING | ARENDELA MUELLE |
| 67 | 2 | Y133 | Y133 | CAGE AIGUILLE | NEEDLE BEARING | JAULA AGUJAS |
| 68 | 1 | Y134 | Y134 | BAGUE GUIDE RESSORT SELECT | BUSHING SOLID | GUÍA MUELLE |
| 69 | 1 | Y140 | Y140 | CAGE AIGUILLE PISTON | NEEDLE BEARING | COJINETE AGUJAS PISTÓN |
| 70 | 1 | Y135 | Y135 | RLT ARBRE BALANCIER G | BEARING | RODAMIENTO |

# Moteur / Engine / Motor 50

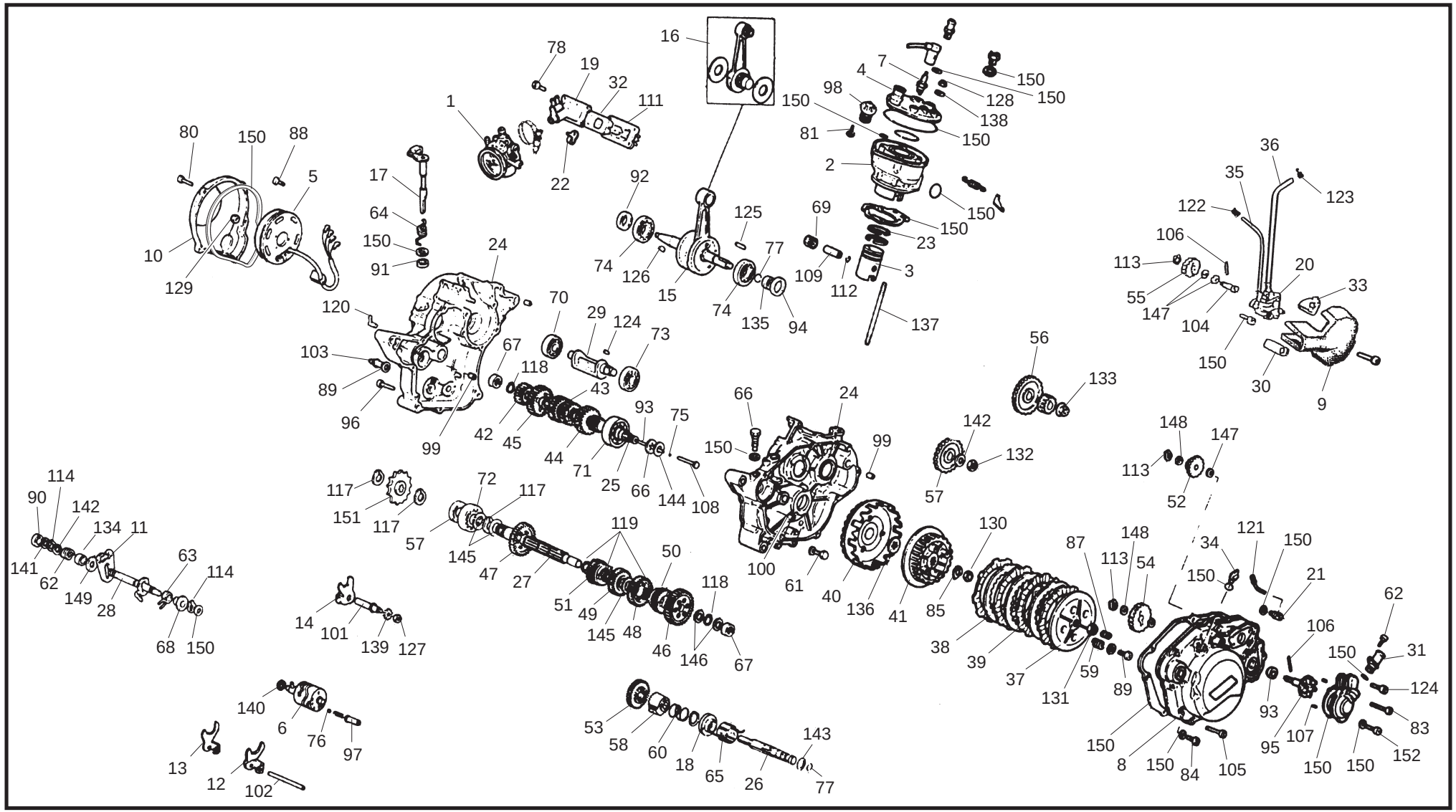

# Moteur / Engine / Motor 50

| POS. | QTS. | 50 SM | 50 END | FRANÇAIS | ENGLISH | ESPAÑOL |
|---|---|---|---|---|---|---|
| 71 | 1 | Y136 | Y136 | RLT ARBRE PRIMARE | BEARING | RODAMIENTO EJE PRIMARIO |
| 72 | 1 | Y137 | Y137 | RLT ARBRE SECONDAIRE | BEARING | RODAMIENTO EJE SECUNDARIO |
| 73 | 1 | Y138 | Y138 | RLT DBALANCIER | BEARING | RODAMIENTO EJE BALANCE |
| 74 | 2 | Y139 | Y139 | RLT VILLO | BEARING | RODAMIENTO CIGÜEÑAL |
| 75 | 1 | Y141 | Y141 | BILLE TIGE EMBRAYAGE | BALL | BOLA VARILLA EMBRAGUE |
| 76 | 1 | Y142 | Y142 | BILLE BARILLET VITESSE | BALL | BOLA TAMBOR SELECTOR |
| 77 | 2 | Y143 | Y143 | JOINT TORIQUE | O RING | TÓRICA |
| 78 | 4 | Y131 | Y131 | VIS BTR | SCREW BTR | TORNILLO DIN 912 |
| 79 | 1 | Y145 | Y145 | JOINT TORIQUE ECHAPPEMENT | O RING | TÓRICA |
| 80 | 5 | Y115 | Y115 | VIS BTR | SCREW BTR | TORNILLO DIN 912 |
| 81 | 2 | Y113 | Y113 | VIS BTR | SCREW BTR | TORNILLO DIN 912 |
| 82 | 1 | Y108 | Y108 | RONDELLE | WASHER | ARANDELA |
| 83 | 1 | Y119 | Y119 | VIS BTR | SCREW BTR | TORNILLO DIN 912 |
| 84 | 2 | Y112 | Y112 | VIS BTR | SCREW BTR | ARANDELA |
| 85 | 1 | Y109 | Y109 | RONDELLE | WASHER LOCK | TORNILLO HEXAGONAL |
| 86 | 1 | Y122 | Y122 | VIS TH | SCREW HEXAGON HEAD | TORNILLO |
| 87 | 3 | Y111 | Y111 | VIS TH | SCREW | TORNILLO HEXAGONAL |
| 88 | 1 | Y123 | Y123 | VIS TH | SCREW HEXAGON HEAD | TORNILLOTORNILLO DIN 912 |
| 89 | 1 | Y129 | Y129 | VIS CLOCHE EMBRAYAGE | SCREW | RETÉN |
| 90 | 1 | Y158 | Y158 | JOINT SPI | OIL SEAL | RETÉN EMBRAGUE |
| 91 | 1 | Y159 | Y159 | JT SPI CDT EMBRAYAGE | OIL SEAL | RETÉN CIGÜEÑAL |
| 92 | 1 | Y160 | Y160 | JT SPI VILLO | OIL SEAL | RETÉN BOMBA DE AGUA |
| 93 | 1 | Y161 | Y161 | JT SPI PPE EAU | OIL SEAL | RETÉN CIGÜEÑAL D |
| 94 | 1 | Y162 | Y162 | JT VILLO D | OIL SEAL | TURBINA BOMBA DE AGUA |

# Moteur / Engine / Motor 50

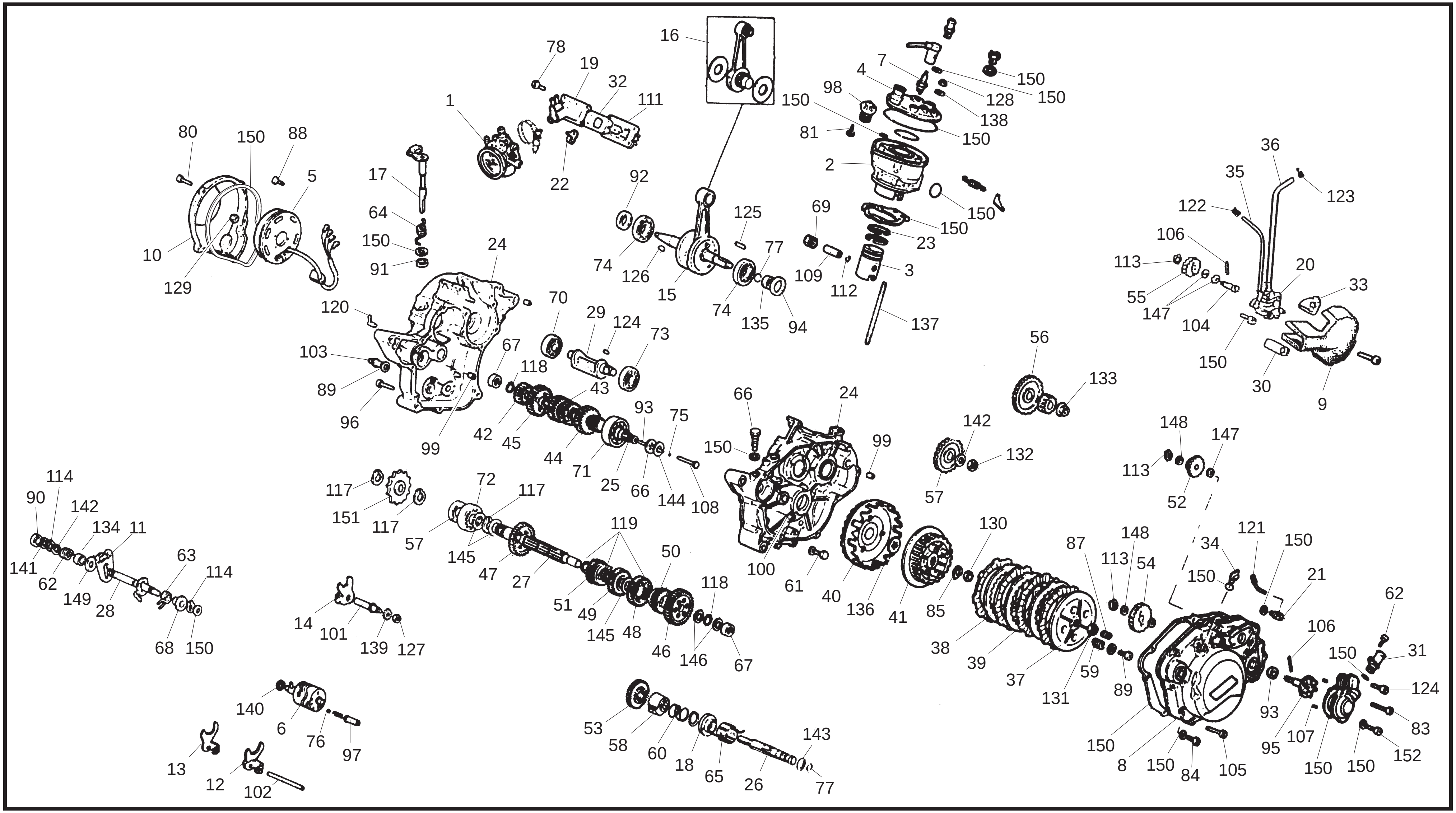

# Moteur / Engine / Motor 50

| POS. | QTS. | 50 SM | 50 END | FRANÇAIS | ENGLISH | ESPAÑOL |
|---|---|---|---|---|---|---|
| 95 | 1 | Y165 | Y165 | TURBINE PPE EAU | IMPELLER SHAFT ASSY | TORNILLO DIN 912 |
| 96 | 13 | Y118 | Y118 | VIS BTR | SCREW BTR | TOPE BOLA BARRILETE SELECTOR |
| 97 | 1 | Y168 | Y168 | BUTEE BILLE BARILLET SELECT | PIN RETAINER | TERMOSTATO |
| 98 | 1 | Y167 | Y167 | THERMOSTAT | THERMOSTAT ASSY | CAS. CENTRAJE CÁRTER |
| 99 | 2 | Y169 | Y169 | PION CENTRAGE CARTER INT | PIN DOWEL | CAS. CENTRAJE CÁRTER EMBRA |
| 100 | 2 | Y170 | Y170 | PION CENTRAGE CARTER EMB | PIN DOWEL | EJE HORQUILLA |
| 101 | 1 | Y176 | Y176 | AXE FOURCHETTE | PIN | EJE HORQUILLA |
| 102 | 1 | Y177 | Y177 | AXE FOURCHETTE | PIN | CONTACTOR PUNTO MUERTO |
| 103 | 1 | Y171 | Y171 | CONTACTEUR POINT MORT | NEUTRAL SWITCH ASSY | EJE BOMBA ACEITE |
| 104 | 1 | Y178 | Y178 | AXE PPE HUILE | PIN | TORNILLO DIN 912 |
| 105 | 7 | Y117 | Y117 | VIS BTR | SCREW BTR | CHAVETA EJE BOMA ACEITE |
| 106 | 1 | Y172 | Y172 | CLAVETTE AXE PPE HUILE | WOODRUF KEY | CASQUILLO CENTRAJE BOMBA |
| 107 | 2 | Y173 | Y173 | PION CENTRAGE PPE | PIN DOWEL | TIJA PULSAROR EMBRAGUE |
| 108 | 1 | Y174 | Y174 | TIGE POUSSE EMBRAYAGE | ROD PUSH | BULÓN PISTÓN |
| 109 | 1 | Y175 | Y175 | AXE PISTON | PISTON PIN | CÁRTER BOMBA AGUA |
| 110 | 1 | Y181 | Y181 | CARTER PPE EAÜ | COVER HOUSING | CAJA DE LAMINAS COMPLETA |
| 111 | 1 | Y180 | Y180 | BOITE CLAPET | REED VALVE ASSY | CIRCLIP PISTÓN |
| 112 | 2 | Y009 | Y009 | CLIP PISTON | PISTON CIRCLIP | CIRCLIP ARBOL |
| 113 | 3 | Y010 | Y010 | CIRCLIPS ARBRE D8 | CIRCLIP | CIRCLIP ARBOL |
| 114 | 2 | Y011 | Y011 | CIRCLIPS ARBRE D12 | CIRCLIP | CIRCLIP ARBOL |
| 115 | 3 | Y012 | Y012 | CIRCLIPS ARBRE D 18 | CIRCLIP | CIRCLIP ARBOL |
| 116 | 1 | Y013 | Y013 | CIRCLIPS ARBRE D 18 | CIRCLIP | CIRCLIP ARBOL |
| 117 | 3 | Y014 | Y014 | CIRCLIPS ARBRE D20 | CIRCLIP | CIRCLIP ARBOL |
| 118 | 2 | Y015 | Y015 | CIRCLIPS ARBRE D14 | CIRCLIP | DEPRESOR |

# Moteur / Engine / Motor 50

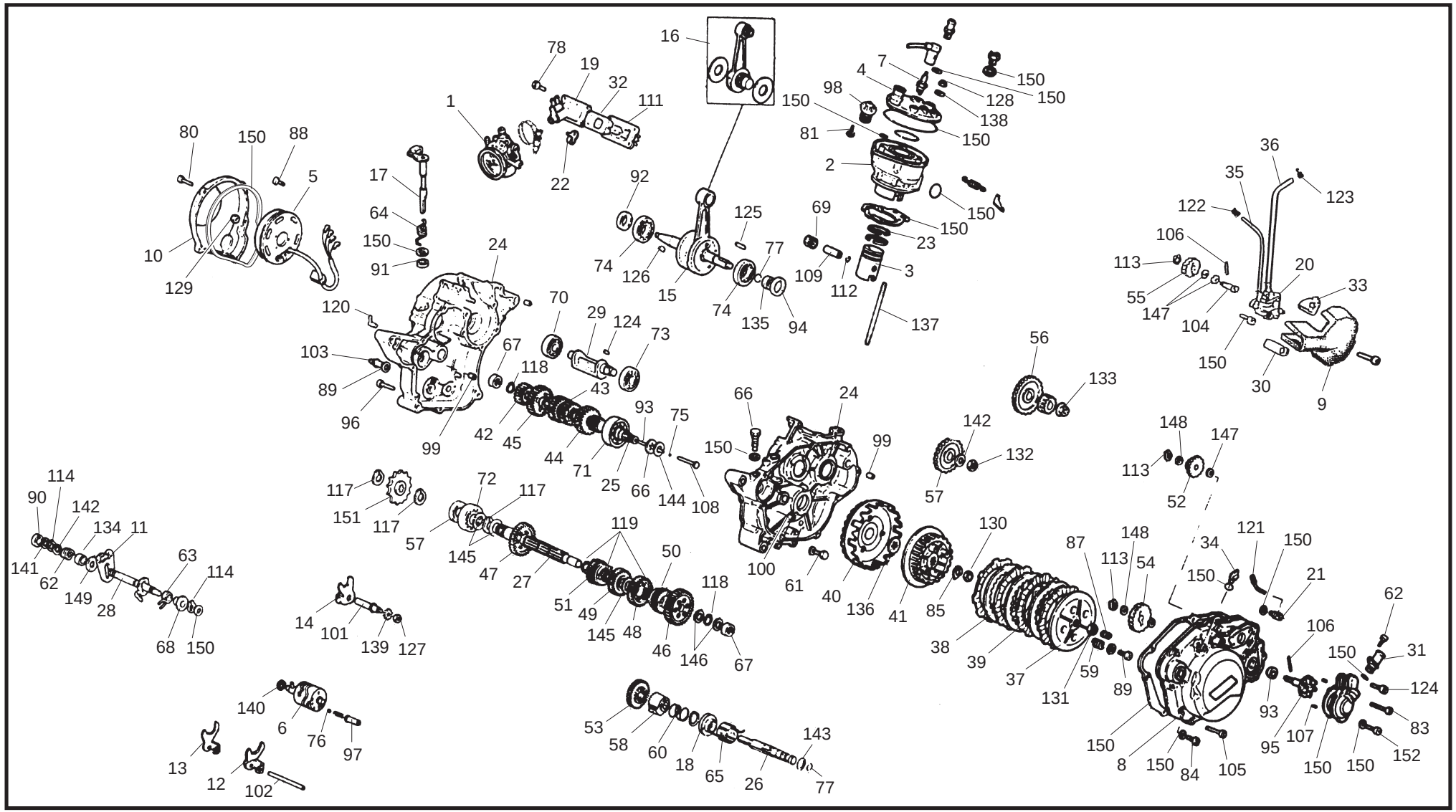

# Moteur / Engine / Motor 50

| POS. | QTS. | 50 SM | 50 END | FRANÇAIS | ENGLISH | ESPAÑOL |
|---|---|---|---|---|---|---|
| 119 | 3 | Y016 | Y016 | CIRCLIPS ARBRE D20 | CIRCLIP | DERIVACION TUBO ACEITE |
| 120 | 1 | Y019 | Y019 | RACCORD MISE A L AIR LIBRE | OIL BREATHER PIPE | CLIP |
| 121 | 1 | Y020 | Y020 | DEVIATION TUYAU HUILE | DEVIATING OIL LINE | CLIP FIJÓ |
| 122 | 2 | Y083 | Y083 | CLIPS TUBE PPE HUILE | CLAMP | CHAVETA PIÑÓN EJE BALANCE |
| 123 | 2 | Y082 | Y082 | CLIPS FIX DURITE | CLAMP | TORNILLO DIN 912 |
| 124 | 2 | Y116 | Y116 | VIS BTR | SCREW BTR | CHAVETA VOLANTE ENCENDIDO |
| 125 | 1 | Y086 | Y086 | CLAVETTE PIGNON VILLO | KEY | TUERCA |
| 126 | 1 | Y087 | Y087 | CLAVETTE VOLANT ALLUMAGE | KEY | TUERCA AUTOBLOCK |
| 127 | 1 | Y088 | Y088 | ECROU | NUT HEXAGON | TUERCA |
| 128 | 4 | Y094 | Y094 | ECROU AUTOBLOCK | NUT CAP | TUERCA |
| 129 | 1 | Y093 | Y093 | ECROU | NUT HEXAGON | TUERCA |
| 130 | 1 | Y090 | Y090 | ECROU H=7 CH 17 | NUT HEXAGON | TUERCA |
| 131 | 1 | Y089 | Y089 | ECROU | NUT HEXAGON | TUERCA |
| 132 | 1 | Y091 | Y091 | ECROU H=5 CH 19 | NUT HEXAGON | CASQUILLO |
| 133 | 1 | Y092 | Y092 | ECROU H=11CH 17 | NUT | CASQUILLO CIGÜEÑAL |
| 134 | 1 | Y095 | Y095 | ENTRETOISE | FORK SPACER | CASQUILLO CAMPANA |
| 135 | 1 | Y097 | Y097 | ENTRETOISE VILLO | SPACER | ESPARRAGO CYLINDRO |
| 136 | 1 | Y096 | Y096 | ENTRETOISE CLOCHE/NOIX EMB. | PLATE THRUST | ARANDELA CULATA |
| 137 | 4 | Y098 | Y098 | GOUJON CYLINDRE | BOLT STUD | ARANDELA |
| 138 | 4 | Y099 | Y099 | RONDELLE CULASSE | WASHER PLAIN | ARANDELA |
| 139 | 1 | Y100 | Y100 | RONDELLE EVENTAIL | WASHER TOOTHED LOCK | ARANDELA |
| 140 | 2 | Y101 | Y101 | RONDELLE | WASHER | ARANDELA |
| 141 | 1 | Y102 | Y102 | RONDELLE | WASHER | ARANDELA |
| 142 | 2 | Y103 | Y103 | RONDELLE | WASHER | ARANDELA |

# Moteur / Engine / Motor 50

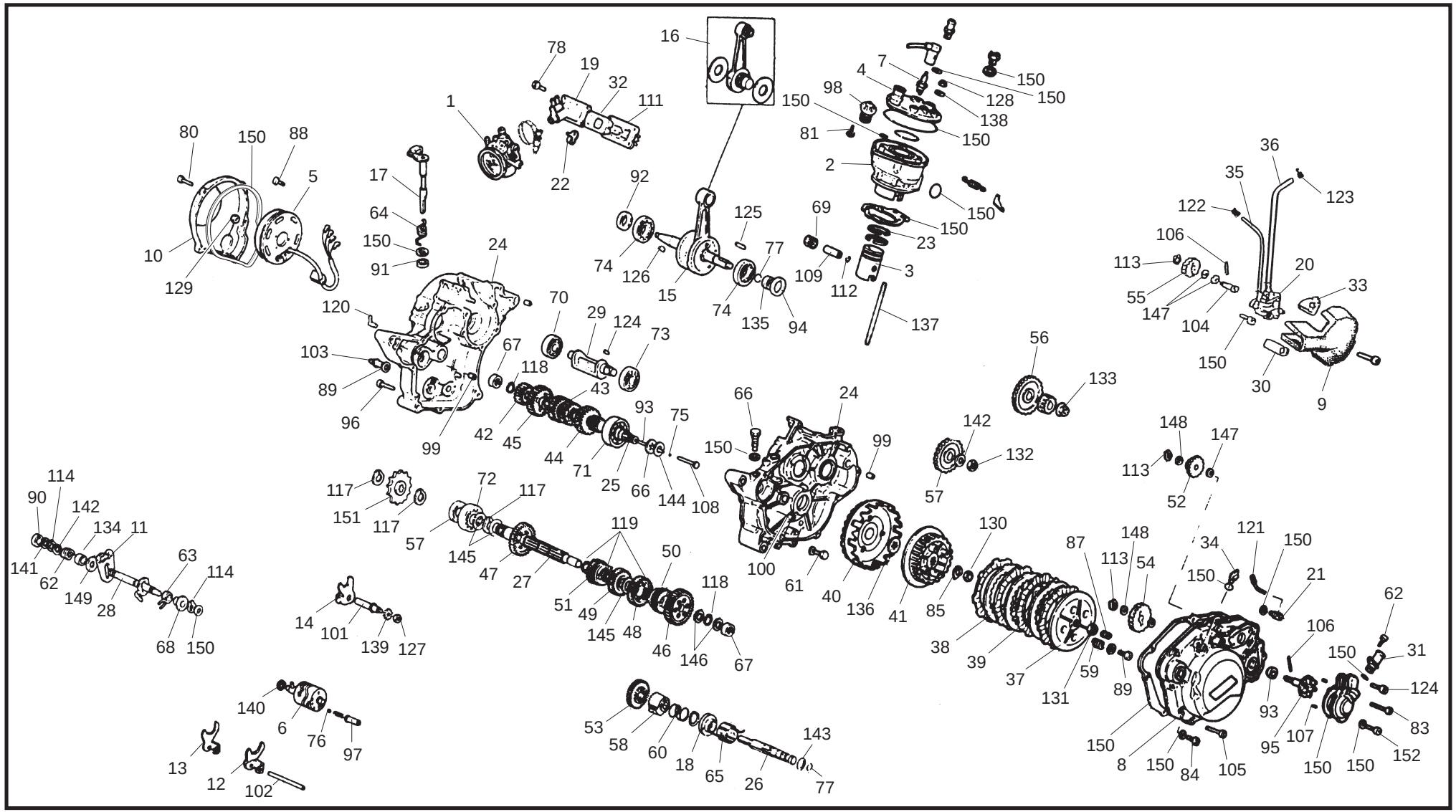

# Moteur / Engine / Motor 50

| POS. | QTS. | 50 SM | 50 END | FRANÇAIS | ENGLISH | ESPAÑOL |
|---|---|---|---|---|---|---|
| 143 | 1 | Y104 | Y104 | RONDELLE | WASHER | ARANDELA |
| 144 | 1 | Y105 | Y105 | RONDELLE | WASHER THRUST | ARANDELA |
| 145 | 2 | Y106 | Y106 | RONDELLE | WASHER | ARANDELA |
| 146 | 2 | Y125 | Y125 | RONDELLE | WASHER | ARENDELA |
| 147 | 3 | Y126 | Y126 | RONDELLE | WASHER | ARENDELA |
| 148 | 3 | Y127 | Y127 | RONDELLE | WASHER | ARANDELA |
| 149 | 1 | Y107 | Y107 | RONDELLE | WASHER | ARANDELA |
| 150 | 1 | Y208 | Y208 | SET JOINT | GASKET KIT | JUEGO JUNTAS |
| 151 | 1 | H249 | -- | PIGNON | PINION | PIÑÓN 13 D. SM |
| 151 | 1 | -- | H109 | PIGNON | PINION | PIÑÓN 12 D. END |
| 151 | 1 | H110 | H110 | PIGNON | PINION | PIÑÓN 11 D. E1 |
| 152 | 1 | Y110 | Y110 | VIS 6X25 | SCREW | TORNILLO |
| 153 | 1 | Y128 | Y128 | MOTEUR 50 MINARELLI EURO O | MINARELLI 50 ENGINE EURO 0 | MOTOR MINARELLI 50 EURO 0 |
| 154 | 1 | Y129 | Y129 | MOTEUR 50 MINARELLI EURO 1 | MINARELLI 50 ENGINE EURO 1 | MOTOR MINARELLI 50 EURO 1 |

# Cylindre / Cylinder / Cilindro

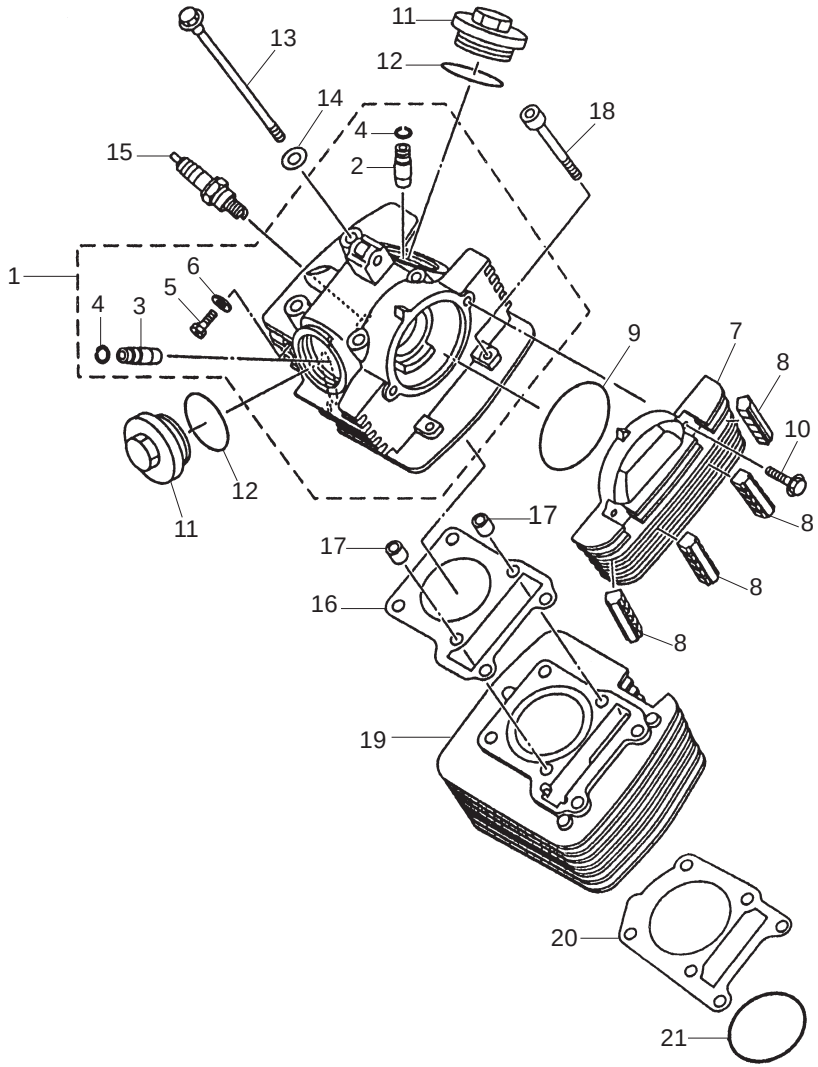

# Cylindre / Cylinder / Cilindro

| POS. | QTS. | 125 SM | 125 END | FRANÇAIS | ENGLISH | ESPAÑOL |
|---|---|---|---|---|---|---|
| 1 | 1 | Y500 | Y500 | CULASSE | HEAD CYLINDER | CONJUNTO CULATA |
| 2 | 1 | Y501 | Y501 | GUIDE VALVE ADMISSION | GUIDE INTAKE VALVE | GUÍA VÁLVULA ADMISIÓN |
| 3 | 1 | Y502 | Y502 | GUIDE SOUPAPE ECHAPPEMENT | GUIDE EXHAUST VALVE | GUÍA VÁLVULA ESCAPE |
| 4 | 2 | Y503 | Y503 | CIRCLIP | CIRCLIP | CIRCLIP |
| 5 | 1 | Y504 | Y504 | VIS TH | SCREW HEXAGON | TORNILLO CONTROL FLUJO DE ACEITE |
| 6 | 1 | Y505 | Y505 | JOINT | GASKET | ARANDELA TORNILLO CONTROL |
| 7 | 1 | Y506 | Y506 | CACHE CULASSE CYLINDRE | COVER CYLINDER HEAD SIDE | TAPA LATERAL CULATA |
| 8 | 4 | Y507 | Y507 | CAOUTCHOUC ANTIVIBRATION | SOUND ABSORBER | GOMA ANTIVIBRACIÓN |
| 9 | 1 | Y508 | Y508 | JOINT TORIQUE | ORING | TÓRICA CIERRE TAPA LATERAL |
| 10 | 2 | Y509 | Y509 | VIS AVEC RONDELLE | BOLT FLANGE | TORNILLO M6 TAPA LATERAL |
| 11 | 2 | Y510 | Y510 | BOUCHON REGLAGE BASCULEUR | COVER CYLINDER HEAD | TAPA DE VÁLVULA |
| 12 | 2 | Y511 | Y511 | JOINT TORIQUE | ORING | TORICA CIERRE TAPA DE VÁLVULA |
| 13 | 4 | Y512 | Y512 | VIS AVEC RONDELLE CULASSE | SCREW WASHER BASE | TORNILLO M8 CULATA |
| 14 | 4 | Y513 | Y513 | RONDELLE PLATE | WASHER PLATE | ARANDELA TORNILLO CULATA |
| 15 | 1 | Y514 | Y514 | BOUGIE (CR7HSA) | SPARKPLUG (CR7HSA) | BUJÍA NGK CR7HSA - DENSO U22FSR-U |
| 16 | 1 | Y515 | Y515 | JOINT DE CULASSE | GASKET CYLINDER HEAD 1 | JUNTA DE CULATA |
| 17 | 2 | Y516 | Y516 | PIONT CENTREUR | PIN DOWEL | ESPIGA CENTRADORA |
| 18 | 2 | Y517 | Y517 | VIS BTR CULASSE | SCREW BTR SOCKET HEAD | TORNILLO M6 CULATA |
| 19 | 1 | Y518 | Y518 | CYLINDRE | CYLINDER | CILINDRO |
| 20 | 1 | Y519 | Y519 | JOINT EMBASE | GASKET CYLINDER | JUNTA CILINDRO |
| 21 | 1 | Y520 | Y520 | JOINT TORIQUE | O-RING | TÓRICA CIERRE CILINDRO |

# Villebrequin assemble / Crankshaft assy / Cigüeñal biela

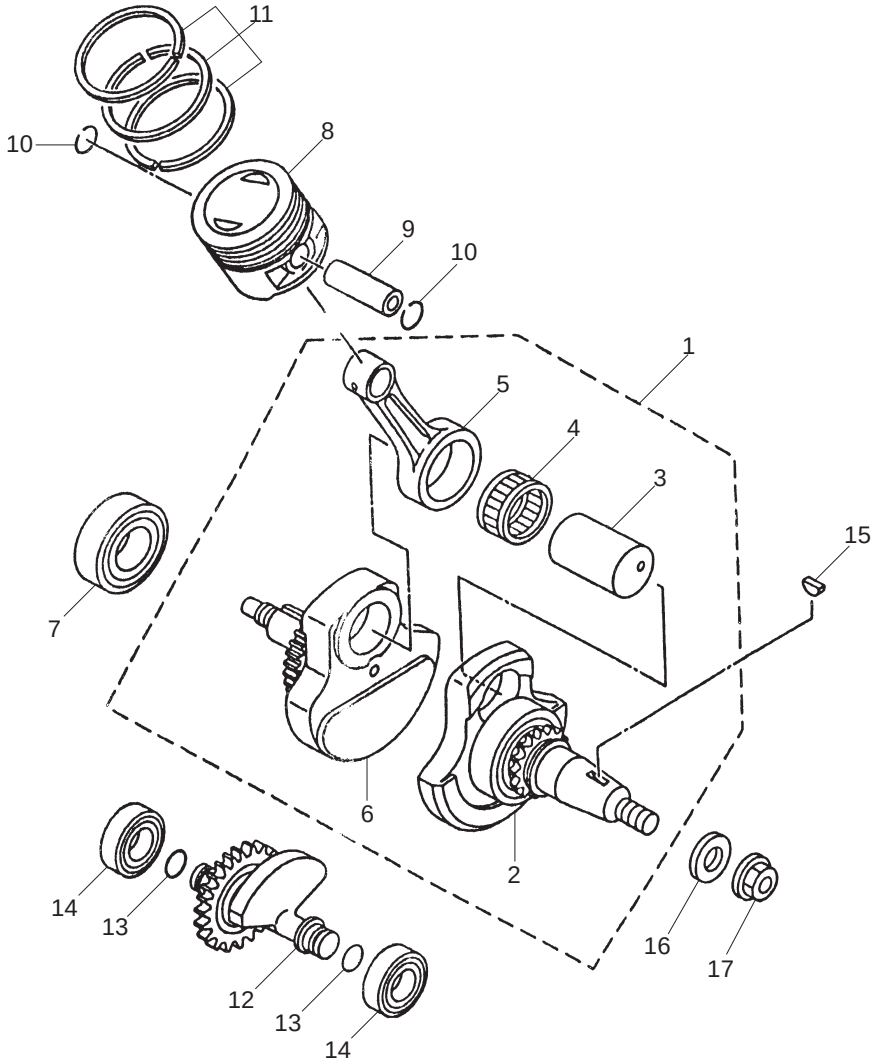

24

# Villebrequin assemble / Crankshaft assy / Cigüeñal biela

| POS. | QTS. | 125 SM | 125 END | FRANÇAIS | ENGLISH | ESPAÑOL |
|---|---|---|---|---|---|---|
| 1 | 1 | Y521 | Y521 | VILLEBREQUIN ASSEMBLE | CRANKSHAFT ASSY | CONJ. CIGÜEÑAL Y BIELA |
| 2 | 1 | Y522 | Y522 | MASSE COTE ALLUMAGE (G) | CRANK IGNITION SIDE (LEFT) | MANIVELA CIGÜEÑAL LADO IZQUIERDO |
| 3 | 1 | Y523 | Y523 | MANETTON BIELLE | PIN CRANK | CODO DE CIGÜEÑAL |
| 4 | 1 | Y524 | Y524 | ROULEMENT VILLO | BEARING | RODAMIENTO INFERIOR BIELA |
| 5 | 1 | Y525 | Y525 | BIELLE | ROD CONNECTING | BIELA |
| 6 | 1 | Y526 | Y526 | MASSE VILLO COTE DROIT | CRANK RIGHT SIDE | MANIVELA CIGÜEÑAL LADO DERECHO |
| 7 | 1 | Y527 | Y527 | ROULEMENT VILLO | BEARING | RODAMIENTO CIGÜEÑAL |
| 8 | 1 | Y528 | Y528 | PISTON STD | PISTON STD | PISTÓN STD |
| 8 | 1 | Y529 | Y529 | PISTON (0.50 mm O/S) | PISTON (0.50 mm O/S) | PISTÓN (0.50 mm O/S) |
| 8 | 1 | Y530 | Y530 | PISTON (1.00 mm O/S) | PISTON (1.00 mm O/S) | PISTÓN (1.00 mm O/S) |
| 9 | 1 | Y531 | Y531 | AXE PISTÓN | PIN PISTON | BULÓN |
| 10 | 2 | Y532 | Y532 | CIRCLIP PISTÓN | CIRCLIP | CIRCLIP |
| 11 | 1 | Y533 | Y533 | SEGMENT STD | PISTÓN RING SET STD | CONJUNTO AROS PISTÓN (STD) |
| 11 | 1 | Y534 | Y534 | SEGMENT (0.50 mm 0/S) | PISTÓN RING SET (0.50 mm 0/S) | CONJUNTO AROS PISTÓN (0.50 mm) |
| 11 | 1 | Y535 | Y535 | SEGMENT (1.00 mm 0/S) | PISTÓN RING SET (1.00 mm 0/S) | CONJUNTO AROS PISTÓN (1.00 mm) |
| 12 | 1 | Y536 | Y536 | BALANCIER EQUILIBRAGE | BALANCER ASSY | EJE DE BALANCE |
| 13 | 2 | Y537 | Y537 | JOINT TORIQUE | 0-RING | ANILLO EJE DE BALANCE |
| 14 | 2 | Y538 | Y538 | ROULEMENT | BEARING | RODAMIENTO EJE DE BALANCE |
| 15 | 1 | Y539 | Y539 | CLAVETTE DEMI LUNE | KEY WOODRUFF | CHAVETA MEDIALUNA |
| 16 | 1 | Y540 | Y540 | RONDELLE PLATE | WASHER PLATE | ARANDELA PLANA |
| 17 | 1 | Y541 | Y541 | ECROU | NUT | TUERCA M12 |

# Soupape admission / Valve intake / Válvula admisión

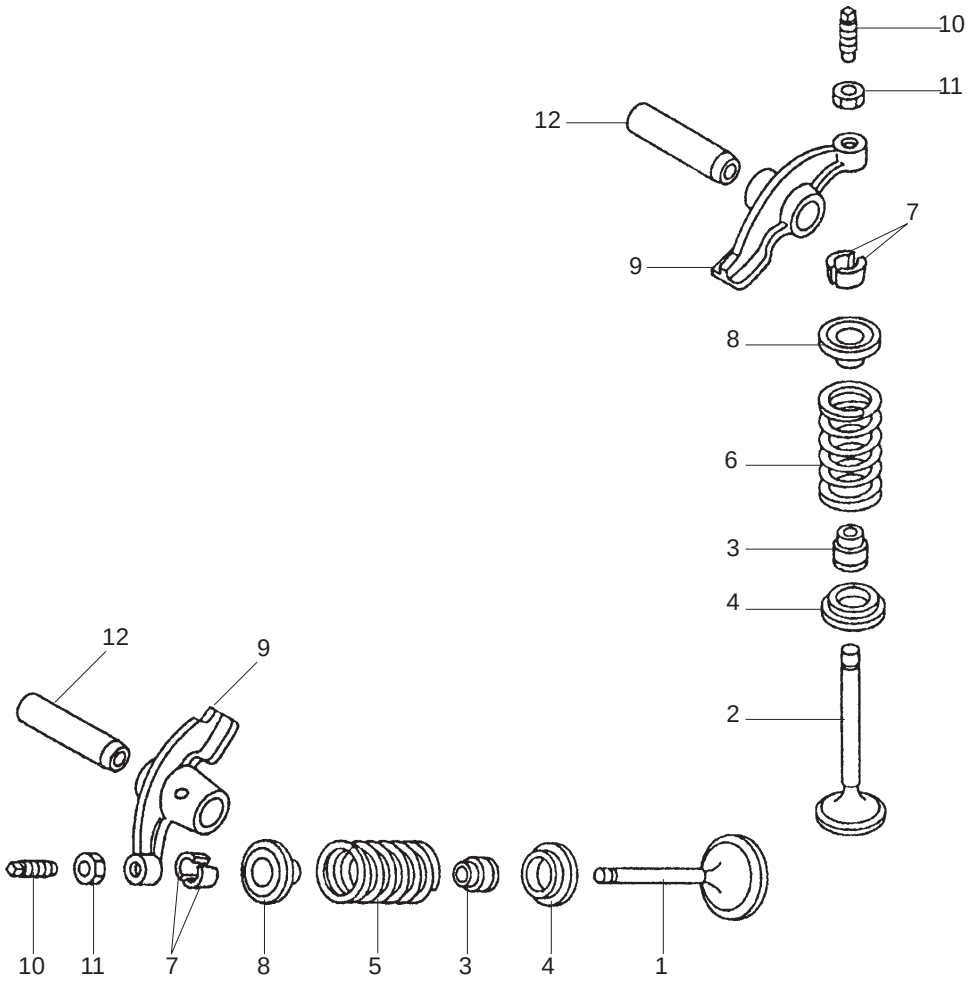

# Soupape admission / Valve intake / Válvula admisión

| POS. | QTS. | 125 SM | 125 END | FRANÇAIS | ENGLISH | ESPAÑOL |
|---|---|---|---|---|---|---|
| 1 | 1 | Y542 | Y542 | SOUPAPE ADMISSION | VALVE INTAKE | VÁLVULA ADMISIÓN |
| 2 | 1 | Y543 | Y543 | SOUPAPE ECHAPPEMENT | VALVE EXHAUST | VÁLVULA DE ESCAPE |
| 3 | 2 | Y544 | Y544 | LARMIER SOUPAPE | SEAL VALVE SYSTEM | ANILLO DE RETENCIÓN |
| 4 | 2 | Y545 | Y545 | RONDELLE APPUI RESSORT | SEAT VALVE SPRING | ASIENTO RESORTE VÁLVULA |
| 5 | 1 | Y546 | Y546 | RESSORT SOUPAPE | SPRING VALVE INNER | RESORTE VÁLVULA ADMISIÓN |
| 6 | 1 | Y547 | Y547 | RESSORT SOUPAPE | SPRING VALVE INNER | RESORTE VÁLVULA ESCAPE |
| 7 | 4 | Y548 | Y548 | DEMI CLAVETTE SOUPAPE | COTTER VALVE | BICONO DE VÁLVULAS |
| 8 | 2 | Y549 | Y549 | RONDELLE RETENUE SOUPAPE | RETAINER VALVE SPRING | ASIENTO DE BICONO DE VÁLVULA |
| 9 | 2 | Y550 | Y550 | BASCULEUR | ROCKER ARM | BALANCÍN |
| 10 | 2 | Y551 | Y551 | VIS REGLAGE VALVE | SCREW VALVE ADJUSTING | TORNILLO DE AJUSTE DE VÁLVULA |
| 11 | 2 | Y552 | Y552 | ECROU | NUT | TUERCA TORNILLO AJUSTE |
| 12 | 2 | Y553 | Y553 | AXE BASCULEUR | SHAFT ROCKER | EJE DE BALANCÍN |

# Syteme distribution / Distribution system / Sistema distribución

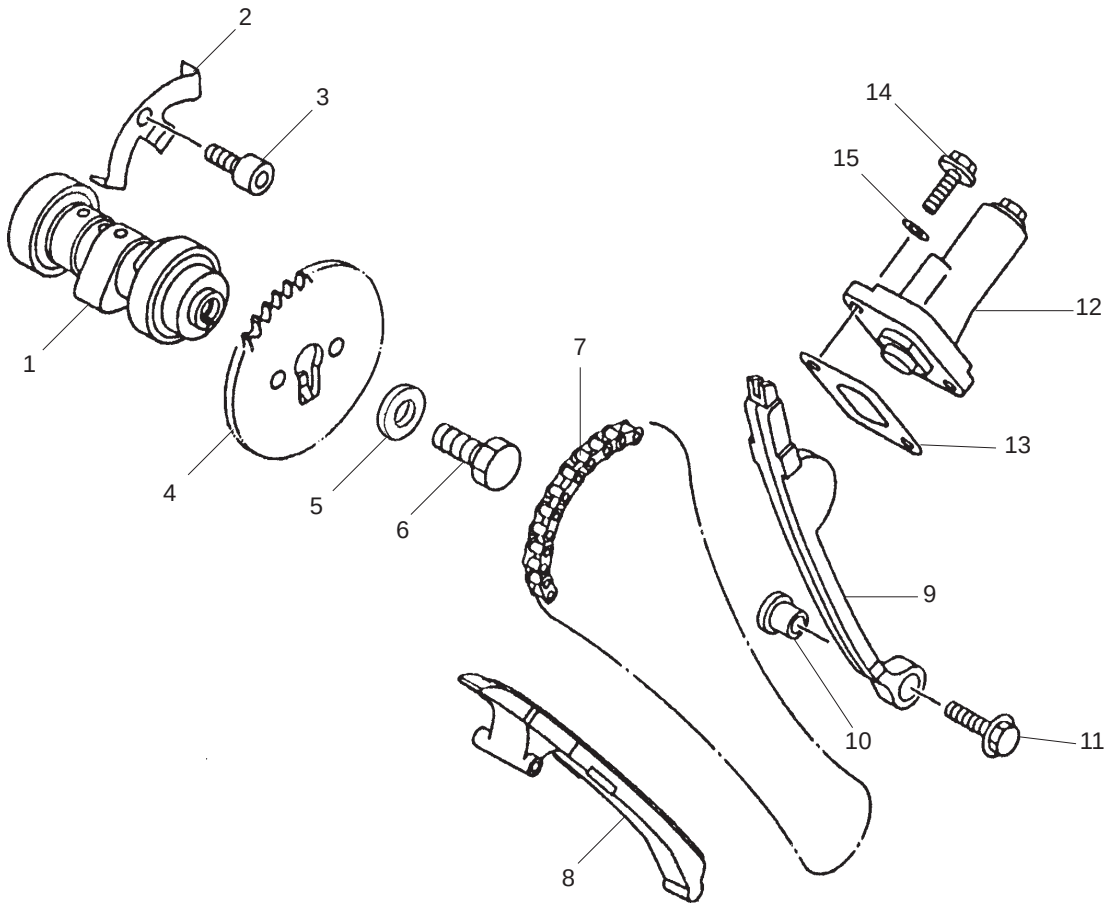

# Syteme distribution / Distribution system / Sistema distribución

| POS. | QTS. | 125 SM | 125 END | FRANÇAIS | ENGLISH | ESPAÑOL |
|---|---|---|---|---|---|---|
| 1 | 1 | Y555 | Y555 | ARBRE A CAME | CAMSHAFT ASSEMBLY | ÁRBOL DE LEVAS COMPLETO |
| 2 | 1 | Y556 | Y556 | PLAQUE DE RETENUE | PLATE | RETENCIÓN |
| 3 | 1 | Y557 | Y557 | VIS BTR | SCREW HEXAGON SOCKET HEAD | TORNILLO M6 RETENCIÓN |
| 4 | 1 | Y558 | Y558 | PIGNON ENTRAINEMENT CHAINE | SPROCKET CAM CHAIN | PIÑÓN CADENA |
| 5 | 1 | Y559 | Y559 | RONDELLE PLATE | WASHER PLATE | ARANDELA PLANA |
| 6 | 1 | Y560 | Y560 | VIS | SCREW | TORNILLO M8 PIÑÓN |
| 7 | 1 | Y561 | Y561 | CHAINE DISTRIBUTION | CHAIN | CADENA DE DISTRIBUCIÓN |
| 8 | 1 | Y562 | Y562 | PATÍN GUIDE CHAINE | CHAIN GUIDE 1 | TOPE DE GUIA CADENA (escape) |
| 9 | 1 | Y563 | Y563 | PATÍN TENDEUR CHAINE | CHAIN GUIDE 2 | TOPE DE GUIA CADENA (Admisión) |
| 10 | 1 | Y564 | Y564 | PION CENTRAGE | COLLAR | CASQUILLO GUÍA |
| 11 | 1 | Y565 | Y565 | VIS AVEC RONDELLE | SCREW WASHER BASED | TORNILLO CON VALONA |
| 12 | 1 | Y566 | Y566 | SYSTEME CPLT TENDEUR CHAINE | TENSIONER ASSY CAM CHAIN | TENSOR CADENA DE DISTRIBUCIÓN |
| 13 | 1 | Y567 | Y567 | JOINT TENDEUR CHAINE | GASKET TENSIONER CASE | JUNTA TENSOR |
| 14 | 2 | Y568 | Y568 | VIS AVEC RONDELLE | SCREW FLANGE | TORNILLO M6 TENSOR |
| 15 | 2 | Y569 | Y569 | RONDELLE | WASHER | JUNTA TORNILLO |

# Carter centraux / Central crankcase / Carter central

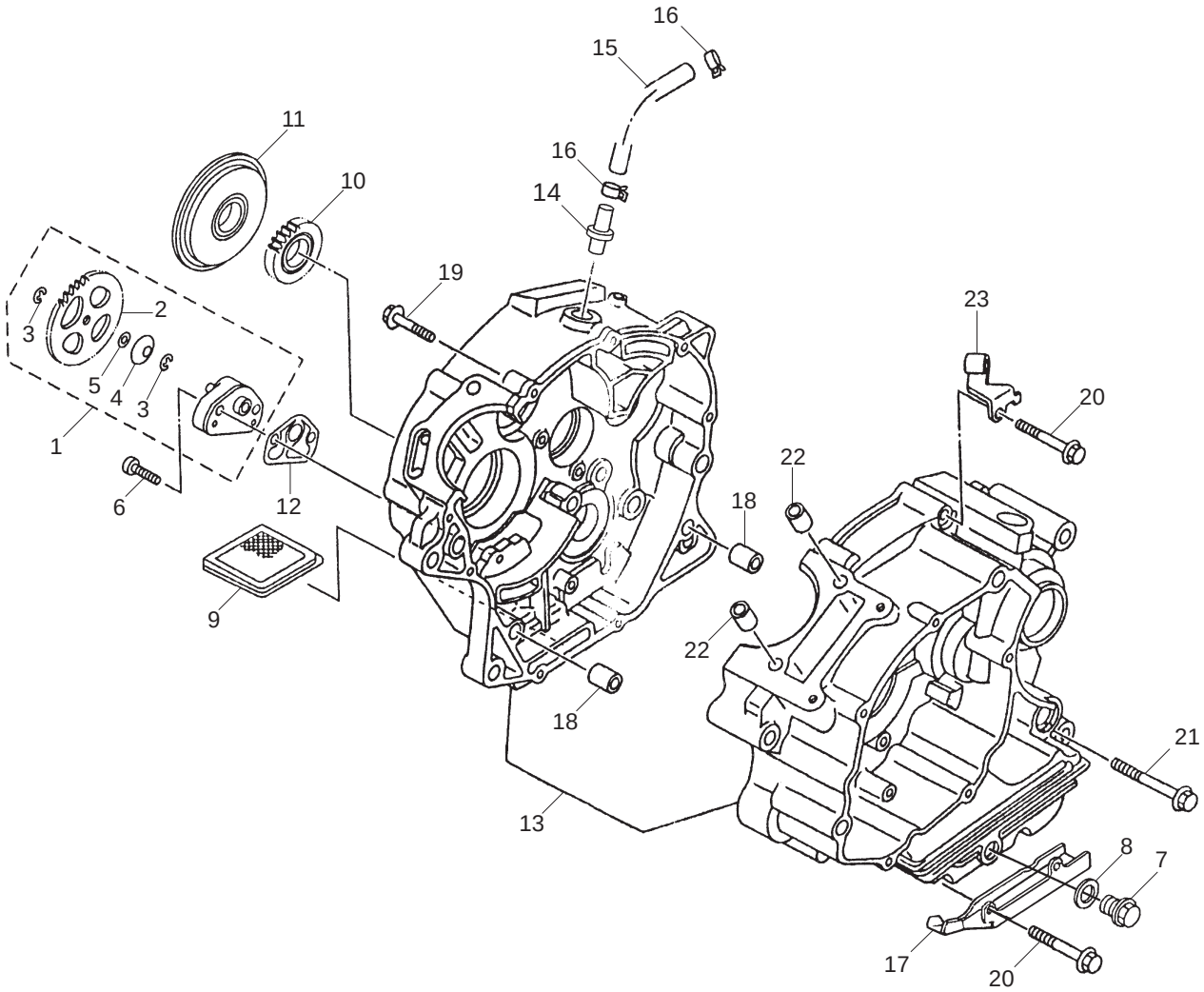

# Carter centraux / Central crankcase / Carter central

| POS. | QTS. | 125 SM | 125 END | FRANÇAIS | ENGLISH | ESPAÑOL |
|---|---|---|---|---|---|---|
| 1 | 1 | Y570 | Y570 | POMPE A HUILE COMPLETE | OIL PUMP ASSY | BOMBA DE ACEITE COMPLETA |
| 2 | 1 | Y571 | Y571 | PIGNON ENTRAINEMENT POMPE | GEAR PUMP DRIVEN | ENGRANAJE PRIMARIO |
| 3 | 2 | Y572 | Y572 | CIRCLIP | CIRCLIP | PRESILLA REDONDA |
| 4 | 1 | Y573 | Y573 | RONDELLE CONIQUE RESSORT | WASHER CONICAL SPRING | RESORTE CÓNICO |
| 5 | 1 | Y574 | Y574 | RONDELLE PLATE | WASHER | ARANDELA PLANA |
| 6 | 2 | Y575 | Y575 | VIS DE POMPE | SCREW FLAT FILLISTER | TORNILLO M5 TAPA BOMBA |
| 7 | 1 | Y576 | Y576 | VIS VIDANGE CARTER | PLUG STRAIGHT SCREW | TORNILLO M12 TAPÓN DE VACIADO |
| 8 | 1 | Y577 | Y577 | JOINT | GASKET | JUNTA TORNILLO VACIADO |
| 9 | 1 | Y578 | Y578 | CREPINE | STRAINER OIL | FILTRO DE ACEITE |
| 10 | 1 | Y579 | Y579 | PIGNON ENTRAINEMENT POMPE | GEAR PUMP DRIVE | ENGRANAJE TRACCION BOMBA |
| 11 | 1 | Y580 | Y580 | FILTRE ROTATIF | FILTER ROTARY | FILTRO ROTATIVO |
| 12 | 1 | Y581 | Y581 | JOINT POMPE HUILE | OIL PUMP GASKET | JUNTA TAPA DE BOMBA |
| 13 | 1 | Y624 | Y624 | CARTER COMPLET | CRANKCASE ASSY | CONJUNTO CÁRTER COMPLETO |
| 14 | 1 | Y625 | Y625 | TUBE DE RENIFLARD | PIPE BREATHER | ESPIGA RESPIRADERO |
| 15 | 1 | Y626 | Y626 | DURITE RENIFLARD | PIPE | TUBO RESPIRADERO |
| 16 | 2 | Y627 | Y627 | COLLIER CLIP | CLIP | PRESILLA |
| 17 | 1 | Y628 | Y628 | PROTECTION | GUARD | BRIDA |
| 18 | 2 | Y629 | Y629 | PION DE CENTRAGE | PIN DOWEL | PASADOR DE ESPIGA |
| 19 | 2 | Y630 | Y630 | VIS | SCREW | TORNILLO M6 |
| 20 | 2 | Y631 | Y631 | VIS | SCREW | TORNILLO M6 |
| 21 | 1 | Y632 | Y632 | VIS | SCREW | TORNILLO M6 |
| 22 | 2 | Y633 | Y633 | PIÓN DE CENTRAGE | PIN DOWEL | PASADOR DE ESPIGA |
| 23 | 1 | Y634 | Y634 | SUPPORT CABLE EMBRAYAGE | HOLDER CLUTCH CABLE | SOSTÉN CABLE DE EMBRAGUE |

# Carburateur / Carburetor / Carburador

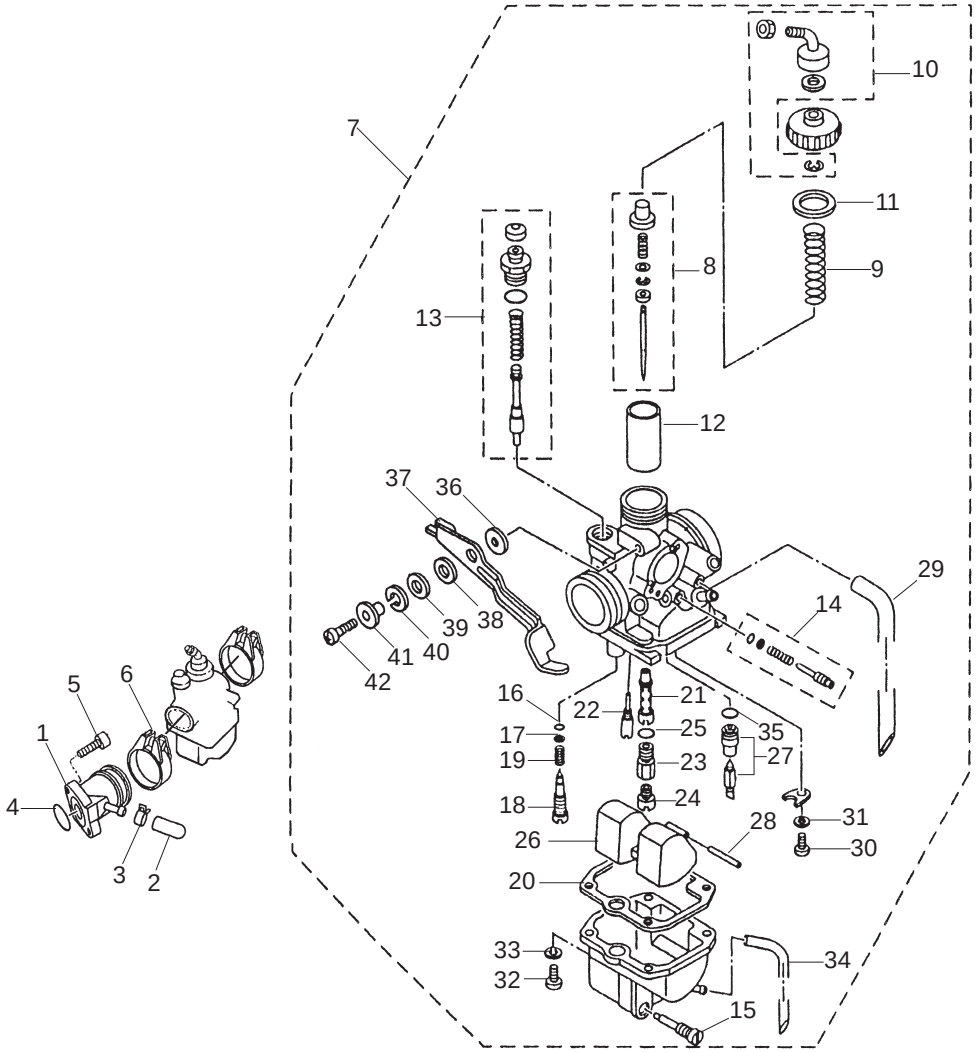

# Carburateur / Carburetor / Carburador

| POS. | QTS. | 125 SM | 125 END | FRANÇAIS | ENGLISH | ESPAÑOL |
|---|---|---|---|---|---|---|
| 1 | 1 | Y582 | Y582 | PIPE ADMISSION | INTAKE MANIFOLD | TOBERA DE CARBURADOR |
| 2 | 1 | Y583 | Y583 | BOUCHON | PLUG BLIND | TAPÓN CIEGO |
| 3 | 1 | Y584 | Y584 | CLIP | CLIP | PRESILLA |
| 4 | 1 | Y585 | Y585 | JOINT TORIQUE | O-RING | ANILLO TÓRICO |
| 5 | 2 | Y586 | Y586 | VIS BTR | BOLT | TORNILLO |
| 6 | 1 | Y587 | Y587 | COLLIER | HOSE CLAMP ASSY | BRIDA TOBERA |
| 7 | 1 | Y588 | Y588 | CARBURATEUR | CARBURETOR ASSY | CARBURADOR COMPLETO |
| 8 | 1 | Y589 | Y589 | KIT AIGUILLE | NEEDLE SET | CONJUNTO AGUJA |
| 9 | 1 | Y590 | Y590 | RESSORT BOISSEAU | SPRING THROTTLE VALVE | MUELLE DE AGUJA |
| 10 | 1 | Y591 | Y591 | KIT REGLAGE CABLE | CABLE ADJUST SCREW SET | CONJ. TORNILLO TENSOR CABLE |
| 11 | 1 | Y592 | Y592 | JOINT | GASKET | JUNTA SUPERIOR CARBURADOR |
| 12 | 1 | Y593 | Y593 | BOISSEAU | VALVE THROTTLE | CAMPANA |
| 13 | 1 | Y594 | Y594 | KIT STARTER | STARTER SET | STARTER |
| 14 | 1 | Y595 | Y595 | KIT VIS RALENTIE | THROTTLE SET SCREW | CONJ. TORNILLO DEL RALENTÍ |
| 15 | 1 | Y596 | Y596 | VIS DE VIDANGE | PLUG DRAIN | TORNILLO DE DRENAJE |
| 16 | 1 | Y597 | Y597 | JOINT TORIQUE | O-RING | TÓRICA TORNI. REGULACIÓN DE AIRE |
| 17 | 1 | Y598 | Y598 | RONDELLE | WASHER | ARAND. TORNI. REGULACIÓN DE AIRE |
| 18 | 1 | Y 599 | Y 599 | VIS AIR | SCREW PILOT | TORNILLO REGULACIÓN DE AIRE |
| 19 | 1 | Y600 | Y600 | RESSORT VIS AIR | SPRING AIR ADJUSTING | MUELLE TORNILLO REGUL. DE AIRE |
| 20 | 1 | Y601 | Y601 | JOINT DE CUVE | GASKET FLOAT CHAMBER | JUNTA DE LA CUBA |
| 21 | 1 | Y602 | Y602 | DIFFUSEUR | NOZZLE MAIN | DIFUSOR PRINCIPAL |
| 22 | 1 | Y603 | Y603 | GICLEUR DE RALENTIE | JET PILOT | SURTIDOR DE RALENTÍ-BAJA (15) |
| 23 | 1 | Y604 | Y604 | SIEGE DE GICLEUR | SETTER NEEDLE JET | SOPORTE SURTIDOR |
| 24 | 1 | Y605 | Y605 | GICLEUR PRINCIPAL 100 | JET MAIN 100 | SURTIDOR PRINCIPAL-ALTA (95) |

# Carburateur / Carburetor / Carburador

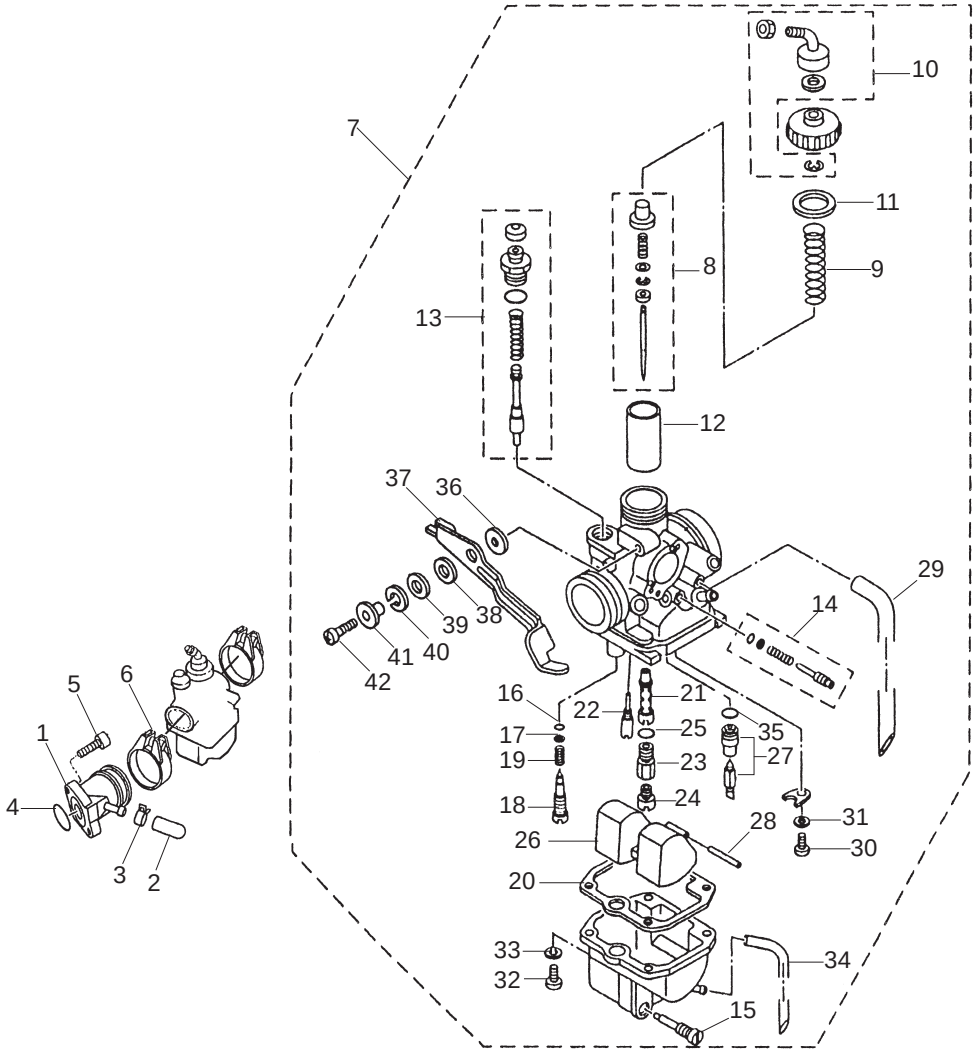

# Carburateur / Carburetor / Carburador

| POS. | QTS. | 125 SM | 125 END | FRANÇAIS | ENGLISH | ESPAÑOL |
|---|---|---|---|---|---|---|
| 25 | 1 | Y606 | Y606 | JOINT TORIQUE | O-RING | TÓRICA |
| 26 | 4 | Y607 | Y607 | FLOTTEUR | FLOAT | FLOTADOR |
| 27 | 4 | Y608 | Y608 | KIT POINTEAU | NEEDLE VALVE SET | CONJ. VÁLVULA DE AGUJA |
| 28 | 1 | Y609 | Y609 | AXE FLOTTEUR | PIN FLOAT | PASADOR DE FLOTADOR |
| 29 | 1 | Y610 | Y610 | TUYAU | PIPE | TUBO RESPIRADERO |
| 30 | 1 | Y611 | Y611 | VIS CRUCIFORME | SCREW PAN HEAD | TORNILLO |
| 31 | 1 | Y612 | Y612 | RONDELLE | WASHER | ARANDELLA |
| 32 | 1 | Y613 | Y613 | VIS CRUCIFORME | SCREW PAN HEAD | TORNILLO |
| 33 | 1 | Y614 | Y614 | RONDELLE RESSORT | WASHER SPRING | ARANDELA |
| 34 | 1 | Y615 | Y615 | TUBE | PIPE | TUBO DE DRENAJE |
| 35 | 1 | Y616 | Y616 | JOINT TORIQUE | O-RING | TÓRICA CONJ. VÁLVULA DE AGUJA |
| 36 | 1 | Y617 | Y617 | RONDELLE PLATE | WASHER PLATE | ARANDELA PALANCA STARTER |
| 37 | 1 | Y618 | Y618 | LEVIER | LEVER | PALANCA STARTER |
| 38 | 1 | Y619 | Y619 | JOINT TORIQUE | O-RING | ANILLO PALANCA |
| 39 | 1 | Y620 | Y620 | RONDELLE | WASHER | ARANDELA |
| 40 | 1 | Y621 | Y621 | RONDELLE | WASHER | ARANDELA |
| 41 | 1 | Y622 | Y622 | BRIDE | COLLAR | CASQUILLO |
| 42 | 1 | Y623 | Y623 | VIS | SCREW | TORNILLO |

# Carter lateraux / Lateral cranckase / Carter lateral

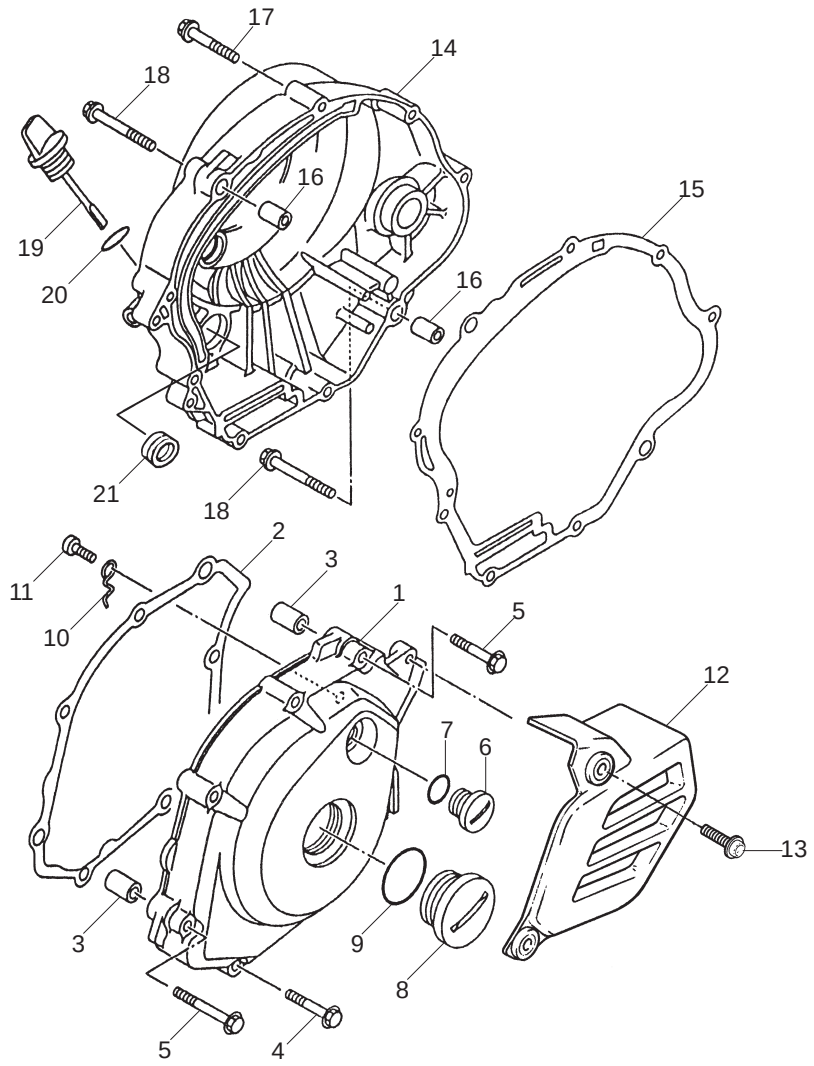

# Carter lateraux / Lateral cranckase / Carter lateral

| POS. | QTS. | 125 SM | 125 END | FRANÇAIS | ENGLISH | ESPAÑOL |
|---|---|---|---|---|---|---|
| 1 | 1 | Y635 | Y635 | CACHE LATERAL GAUCHE | COVER CRANKCASE LEFT | TAPA CÁRTER DERECHO |
| 2 | 1 | Y636 | Y636 | JOINT CARTER | GASKET CRANKCASE | JUNTA TAPA CÁRTER DERECHO |
| 3 | 2 | Y637 | Y637 | PION CENTRAGE | PIN DOWEL | CASQUILLO CENTRADOR |
| 4 | 5 | Y638 | Y638 | VIS EPAULE | BOLT FLANGE | TORNILLO M6 |
| 5 | 2 | Y639 | Y639 | VIS EPAULE | BOLT FLANGE | TORNILLO M6 |
| 6 | 1 | Y640 | Y640 | VIS REGARD | PLUG STRAIGHT SCREW | TAPÓN DE CONTROL |
| 7 | 1 | Y641 | Y641 | JOINT TORIQUE | O-RING | TÓRICA TAPÓN DE CONTROL |
| 8 | 1 | Y642 | Y642 | VIS REGARD | PLUG STRAIGHT SCREW | TAPÓN CENTRAL |
| 9 | 1 | Y643 | Y643 | JOINT TORIQUE | O-RING | ANILLO 0 |
| 10 | 1 | Y644 | Y644 | FIX CABLE | PLATE | FIJADOR |
| 11 | 1 | Y645 | Y645 | VIS CRUCIFORME | SCREW PAN HEAD | TORNILLO FIJADOR |
| 12 | 1 | Y646 | Y646 | CACHE PIGNON | COVER CHAIN CASE | CUBRE CADENA |
| 13 | 2 | Y647 | Y647 | VIS EPAULE | BOLT FLANGE | TORNILLO M6 |
| 14 | 1 | Y648 | Y648 | CACHE LATERAL DROIT | COVER CRANKCASE RIGHT | CÁRTER DERECHO |
| 15 | 1 | Y649 | Y649 | JOINT CACHE LAT DROIT | GASKET CRANKCASE COVER RIGHT | JUNTA CÁRTER DERECHO |
| 16 | 2 | Y650 | Y650 | PION DE CENTRAGE | PIN DOWEL | CASQUILLO CENTRADOR |
| 17 | 5 | Y651 | Y651 | VIS EPAULE | BOLT FLANGE | TORNILLO M6 |
| 18 | 2 | Y652 | Y652 | VIS EPAULE | BOLT FLANGE | TORNILLO M6 |
| 19 | 1 | Y653 | Y653 | BOUCHON NIVEAU HULE | PLUG OIL LEVEL | TAPÓN DE NIVEL ACEITE |
| 20 | 1 | Y654 | Y654 | JOINT TORIQUE | O-RING | TÓRICA NIVEL DE ACEITE |
| 21 | 1 | Y655 | Y655 | JOINT SPI | OIL SEAL | RETÉN |

# Systeme demarreur / Start system / Sistema arranque

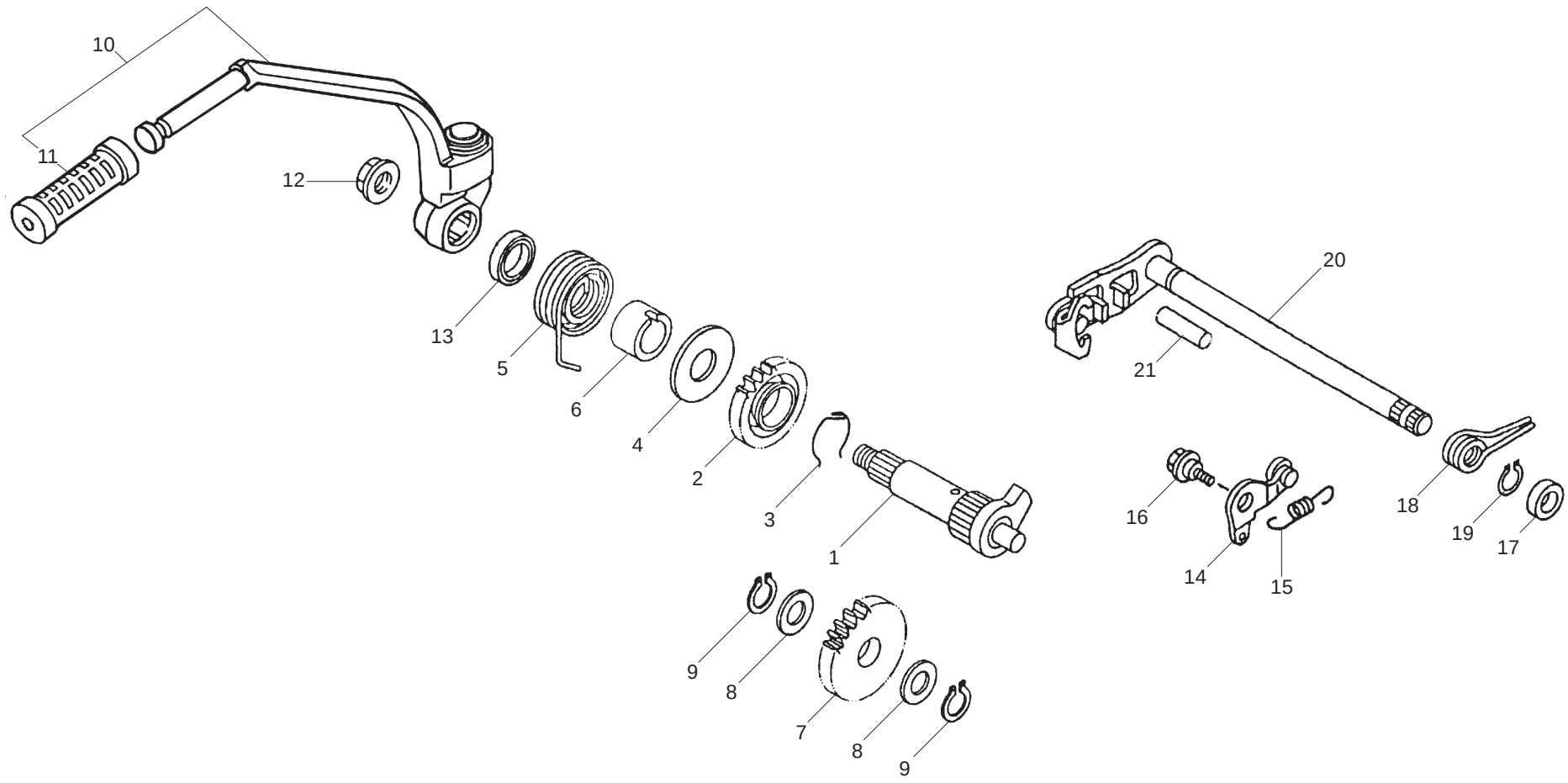

# Systeme demarreur / Start system / Sistema arranque

| POS. | QTS. | 125 SM | 125 END | FRANÇAIS | ENGLISH | ESPAÑOL |
|---|---|---|---|---|---|---|
| 1 | 1 | Y656 | Y656 | ARBRE DE KICK | KICK STARTER AXLE ASSEMBLY | EJE PEDAL ARRANQUE |
| 2 | 1 | Y657 | Y657 | PIGNON | GEAR KICK | ENGRENAJE PEDAL ARRANQUE |
| 3 | 1 | Y658 | Y658 | CLIP | CLIP | CLIP |
| 4 | 1 | Y659 | Y659 | RONDELLE PLATE | WASHER PLATE | ARANDELA PLANA |
| 5 | 1 | Y660 | Y660 | RESSORT DE TORSION | SPRING TORSION | MUELLE DE TORSIÓN |
| 6 | 1 | Y661 | Y661 | GUIDE RESSORT | SPRING GUIDE | CASQUILLO |
| 7 | 1 | Y662 | Y662 | PIGNON FOU | GEAR KICK IDLE | PIÑÓN LIBRE PEDAL ARRANQUE |
| 8 | 2 | Y663 | Y663 | RONDELLE PLATE | WASHER PLATE | ARANDELLA PLANA |
| 9 | 2 | Y664 | Y664 | CIRCLIP | CIRCLIP | CIRCLIP |
| 10 | 1 | Y665 | Y665 | KICK COMPLET | KICK STARTER LEVER | PEDAL ARRAQNQUE |
| 11 | 1 | Y666 | Y666 | PROTECTION PLASTIQUE | PROTECTOR PEDAL | GOMA PEDAL |
| 12 | 1 | Y667 | Y667 | VIS | SCREW | TUERCA M12 |
| 13 | 1 | Y668 | Y668 | JOINT SPI | OIL SEAL | RETENEDOR |
| 14 | 1 | Y740 | Y740 | LEVIER DE BUTEE | STOPPER LEVER ASSY | PALANCA DE TOPE |
| 15 | 1 | Y741 | Y741 | RESSORT | SPRING | MUELLE |
| 16 | 1 | Y742 | Y742 | VIS | SCREW | TORNILLO |
| 17 | 1 | Y743 | Y743 | JOINT SPI | OIL SEAL | RETÉN |
| 18 | 1 | Y744 | Y744 | RESSORT | SPRING | MUELLE DE TORSIÓN |
| 19 | 1 | Y745 | Y745 | CIRCLIP | CIRCLIP | CIRCLIP |
| 20 | 1 | Y746 | Y746 | ARBRE DE SELECTION | SHIFT SHAFT ASSEMBLY | EJE SELECTOR |
| 21 | 1 | Y747 | Y747 | PION | PIN DOWEL | PASADOR DE CLAVIJA |

# Demarreur electrique / Kickstarter / Arranque eléctrico

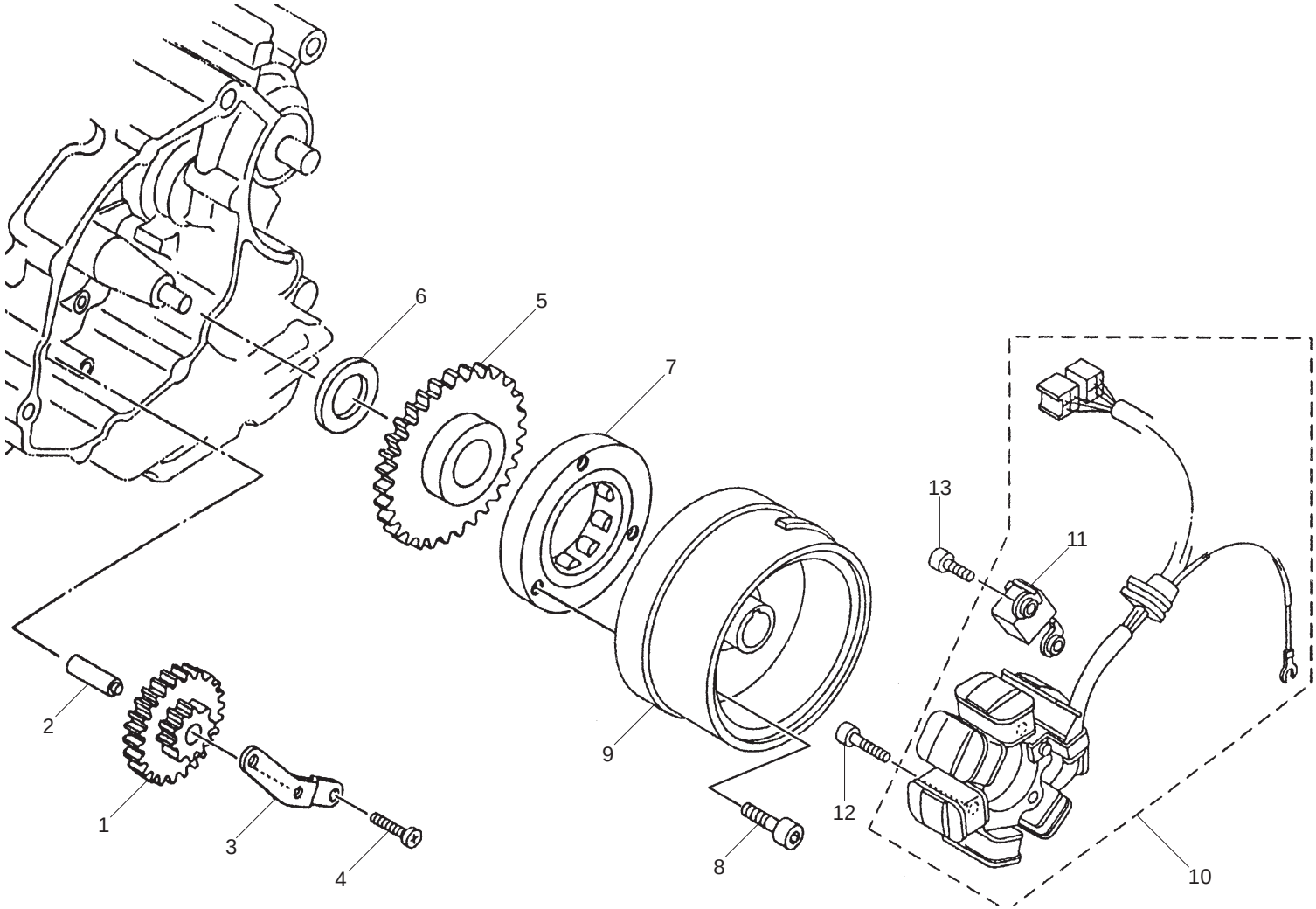

# Demarreur electrique / Kickstarter / Arranque eléctrico

| POS. | QTS. | 125 SM | 125 END | FRANÇAIS | ENGLISH | ESPAÑOL |
|---|---|---|---|---|---|---|
| 1 | 1 | Y669 | Y669 | PIGNON NEUTRE | NEUTRAL GEAR | PIÑÓN ARRANQUE |
| 2 | 1 | Y670 | Y670 | ARBRE | SHAFT | EJE |
| 3 | 1 | Y671 | Y671 | PLAQUE DE VERROUILLAGE | PLATE | PLATINA PIÑÓN DE ARRANQUE |
| 4 | 2 | Y672 | Y672 | VIS CRUCIFORME | SCREW | TORNILLO M6 |
| 5 | 1 | Y673 | Y673 | PIGNON | GEAR | PIÑÓN ARRANQUE CIGÜEÑAL |
| 6 | 1 | Y674 | Y674 | RONDELLE PLATE | WASHER | ARANDELLA PLANA |
| 7 | 1 | Y675 | Y675 | ROUE LIBRE | BEARING PLATE | RUEDA LIBRE |
| 8 | 3 | Y676 | Y676 | VIS BTR | BOLT HEXAGON SOCKET HEAD | TORNILLO M6 |
| 9 | 1 | Y748 | Y748 | ROTOR | ROTOR ASSY | ROTOR COMPLETO |
| 10 | 1 | Y749 | Y749 | STATOR | STATOR ASSY | ESTATOR COMPLETO |
| 11 | 1 | Y750 | Y750 | CAPTEUR | TRIGGER | BOBINA DE PULSACIÓN CONJUNTA |
| 12 | 3 | Y751 | Y751 | VIS BTR | BOLT HEXAGON SOCKET HEAD | TORNILLO M6 |
| 13 | 2 | Y752 | Y752 | VIS BTR | BOLT HEWGON SOCKET HEAD | TORNILLO M6 |

# Embrayage / Clutch / Embrague

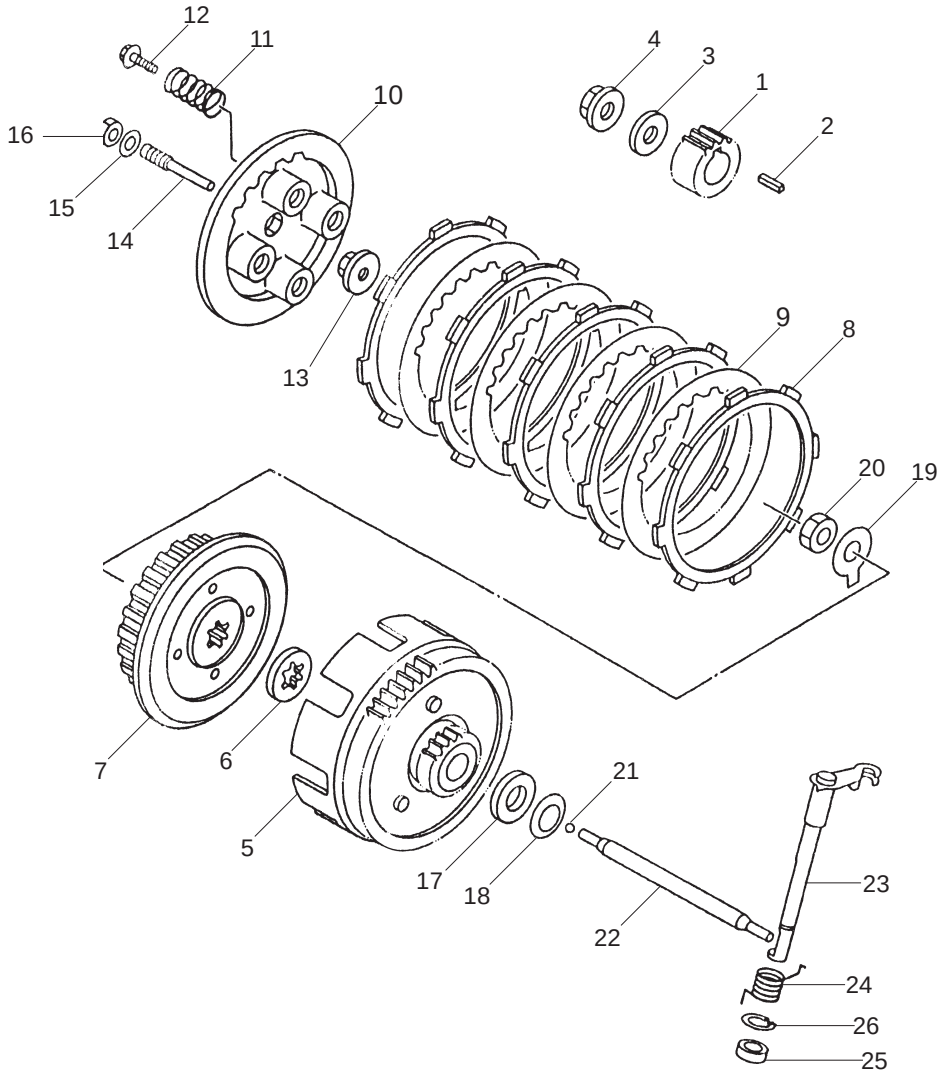

# Embrayage / Clutch / Embrague

| POS. | QTS. | 125 SM | 125 END | FRANÇAIS | ENGLISH | ESPAÑOL |
|---|---|---|---|---|---|---|
| 1 | 1 | Y677 | Y677 | PIGNON | GEAR PRIMARY DRIVE | CORONA TRANS. PRIMARIA |
| 2 | 1 | Y678 | Y678 | CLAVETTE | KEY STRAIGHT | CHAVETA RECTA |
| 3 | 1 | Y679 | Y679 | RONDELLE PLATE | WASHER PLATE | ARANDELLA PLANA |
| 4 | 1 | Y680 | Y680 | ECROU | NUT | TUERCA M12 |
| 5 | 1 | Y681 | Y681 | CLOCHE EMBRAYAGE | CLUTCH BASKET ASSEMBLY | CAMPANA DE EMBRAGUE |
| 6 | 1 | Y682 | Y682 | RONDELLE | PLATE THRUST | ARANDELA DE EMPUJE |
| 7 | 1 | Y683 | Y683 | NOIX EMBRAYAGE | CLUTCH HUB | CUBO DE EMBRAGUE |
| 8 | 5 | Y684 | Y684 | DISQUE FRICTION | PLATE FRICTION | PLATO DE FRICCIÓN |
| 9 | 4 | Y685 | Y685 | DISQUE LISSE | PLATE CLUCTCH | DISCO DE EMBRAGUE |
| 10 | 1 | Y686 | Y686 | PLATEAU DE PRESSION | PLATE PRESSURE | PLATO DE PRESIÓN |
| 11 | 4 | Y687 | Y687 | RESSORT EMBRAYAGE | SPRING PRESSURE | MUELLE DE COMPRESIÓN |
| 12 | 4 | Y688 | Y688 | VIS EPAULE | BOLT FLANGE | TORNILLO CON ARANDELA M8 |
| 13 | 1 | Y689 | Y689 | RONDELLLE DE POUSSEE | PLATE FLUSH | EMPUJADOR |
| 14 | 1 | Y690 | Y690 | AXE DE POUSSEE | ROD PUSH | VÁSTAGO DE EMPUJE REGULABLE |
| 15 | 1 | Y691 | Y691 | RONDELLE | WASHER | ARANDELA |
| 16 | 1 | Y692 | Y692 | ECROU | NUT | TUERCA M6 VÁSTAGO DE EMPUJE |
| 17 | 1 | Y694 | Y694 | RONDELLE FRICTION | PLATE THRUST | ARANDELA |
| 18 | 1 | Y695 | Y695 | RONDELLE CONIQUE | WASHER CONICAL SPRING | MUELLE CÓNICO |
| 19 | 1 | Y696 | Y696 | RONDELLE D'ARRET | WASHER LOCK | ARANDELA DE CIERRE |
| 20 | 1 | Y697 | Y697 | ECROU | NUT | TUERCA M12 CUBO DE EMBRAGUE |
| 21 | 1 | Y698 | Y698 | BILLE | BALL | BOLA |
| 22 | 1 | Y699 | Y699 | AXE DE POUSSEE | ROD PUSH | VARILLA DE EMPUJE |

# Embrayage / Clutch / Embrague

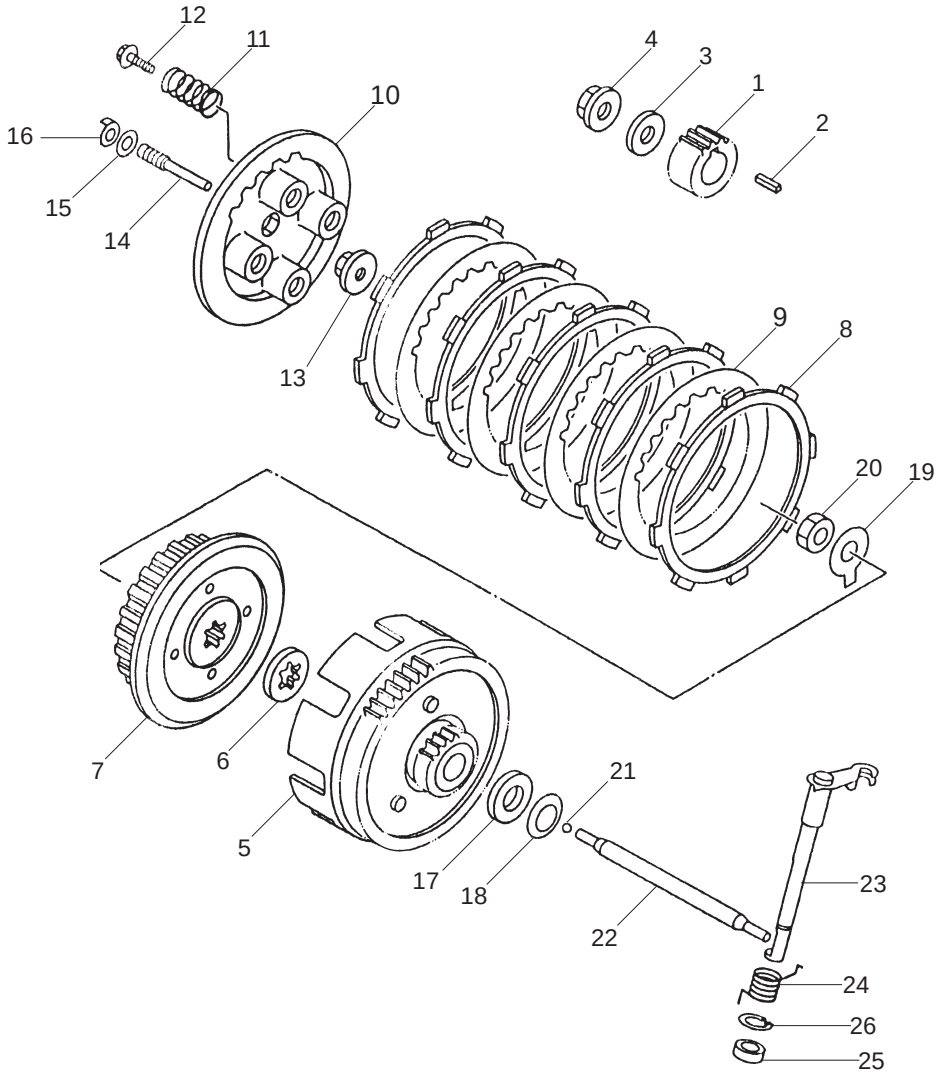

# Embrayage / Clutch / Embrague

| POS. | QTS. | 125 SM | 125 END | FRANÇAIS | ENGLISH | ESPAÑOL |
|---|---|---|---|---|---|---|
| 23 | 1 | Y700 | Y700 | LEVIER EMBRAYAGE | PUSH LEVER | PALANCA DE EMPUJE |
| 24 | 1 | Y701 | Y701 | RESSORT | SPRING TORSION | RESORTE DE TORSIÓN |
| 25 | 1 | Y702 | Y702 | JOINT SPI | OIL SEAL | RETÉN |
| 26 | 1 | Y703 | Y703 | CIRCLIP | CIRCLIP | PRESILLA RONDADA |

# Transmission / Transmission / Transmisión

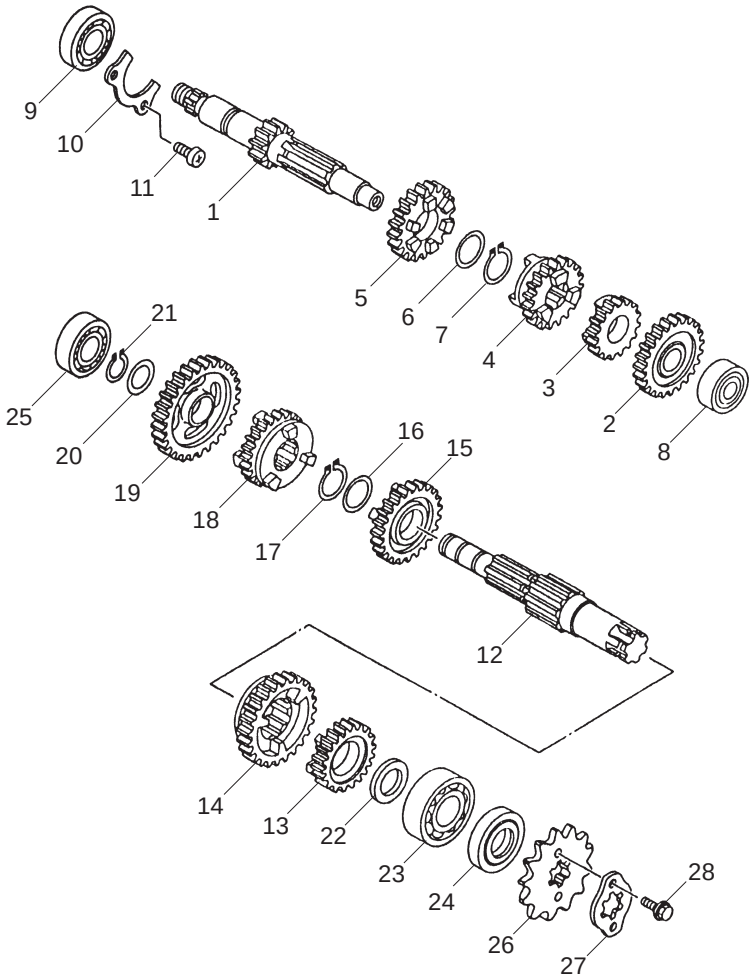


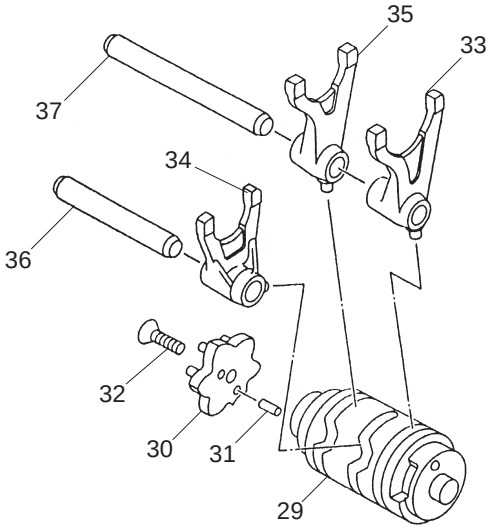

# Transmission / Transmission / Transmisión

| POS. | QTS. | 125 SM | 125 END | FRANÇAIS | ENGLISH | ESPAÑOL |
|---|---|---|---|---|---|---|
| 1 | 1 | Y704 | Y704 | ARBRE PRIMAIRE | AXLE MAIN | EJE PRIMARIO |
| 2 | 1 | Y705 | Y705 | PIGNON 5º Z=25 | GEAR 5TH | PIÑÓN DE 5º Z=25 |
| 3 | 1 | Y706 | Y706 | PIGNON 2TH Z=18 | GEAR 2TH | PIÑÓN DE 2º Z=18 |
| 4 | 1 | Y707 | Y707 | PIGNON 3TH Z=19 | GEAR 3TH | PIÑÓN DE 3º Z=19 |
| 5 | 1 | Y708 | Y708 | PIGNON 4TH Z=18 | GEAR 4TH | PIÑÓN DE 4º Z=18 |
| 6 | 1 | Y709 | Y709 | RONDELLE | WASHER | ARANDELA |
| 7 | 1 | Y710 | Y710 | CIRCLIP | CIRCLIP | CIRCLIP |
| 8 | 1 | Y711 | Y711 | ROULEMENT | BEARING | RODAMIENTO |
| 9 | 1 | Y712 | Y712 | ROULEMENT | BEARING | RODAMIENTO |
| 10 | 1 | Y713 | Y713 | PLAQUE BUTEE | PLATE COVER | PLACA FIJACIÓN RODAMIENTO |
| 11 | 2 | Y714 | Y714 | VIS CRUCIFORME | SCREW PAN HEAD | TORNILLO M6 |
| 12 | 1 | Y715 | Y715 | ARBRE SECONDAIRE | DRIVE AXLE ASSY | EJE SECUNDARIO |
| 13 | 1 | Y716 | Y716 | ROUE 5TH Z=21 | GEAR 5TH | RUEDA DE 5º Z=21 |
| 14 | 1 | Y717 | Y717 | ROUE 2TH Z=32 | GEAR 2TH | RUEDA DE 2º Z=32 |
| 15 | 1 | Y718 | Y718 | ROUE 3TH Z=25 | GEAR 3TH | RUEDA DE 3º Z=25 |
| 16 | 1 | Y719 | Y719 | RONDELLE PLATE | WASHER PLATE | ARANDELA |
| 17 | 1 | Y720 | Y720 | CIRCLIP | CIRCLIP | CIRCLIP |
| 18 | 1 | Y721 | Y721 | ROUE 4TH Z=23 | GEAR 4TH | RUEDA DE 4º Z=23 |
| 19 | 1 | Y722 | Y722 | ROUE 1TH Z=34 | GEAR 1ST | RUEDA 1º Z=34 |
| 20 | 1 | Y723 | Y723 | RONDELLE PLATE | WASHER PLATE | ARANDELA PLANA |
| 21 | 1 | Y724 | Y724 | CIRCLIP | CIRCLIP | PRESILLA REDONDA |
| 22 | 1 | Y725 | Y725 | RONDELLE PLATE | WASHER PLATE | ARANDELA PLANA |
| 23 | 1 | Y726 | Y726 | ROULEMENT | BEARING | RODAMIENTO |
| 24 | 1 | Y727 | Y727 | JOINT SPI | OIL SEAL | RETÉN |

# Transmission / Transmission / Transmisión

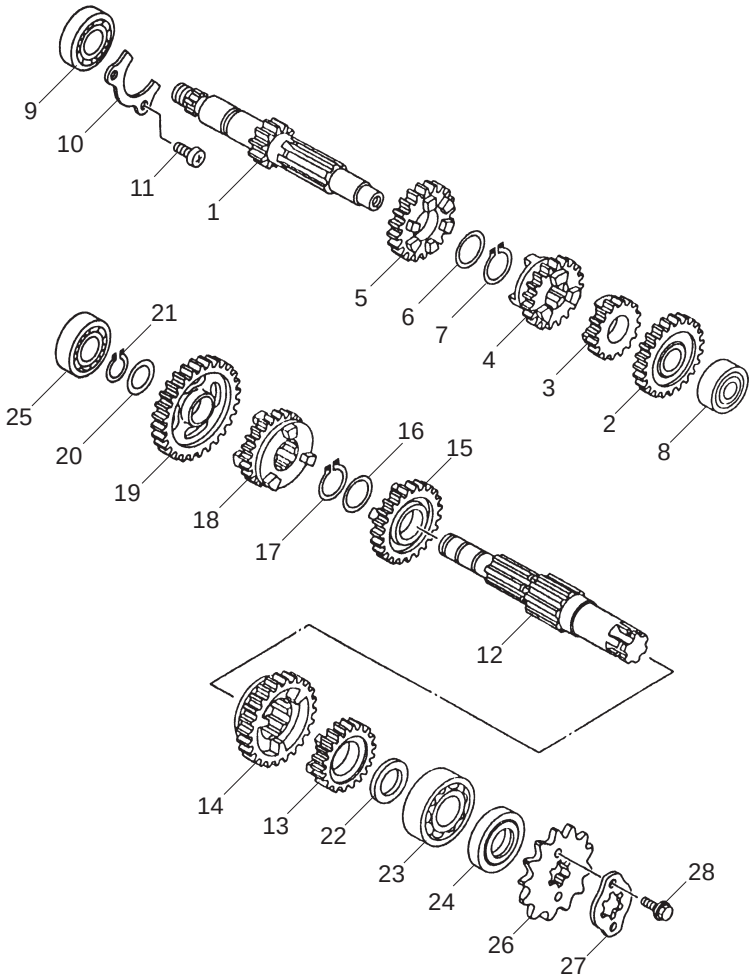


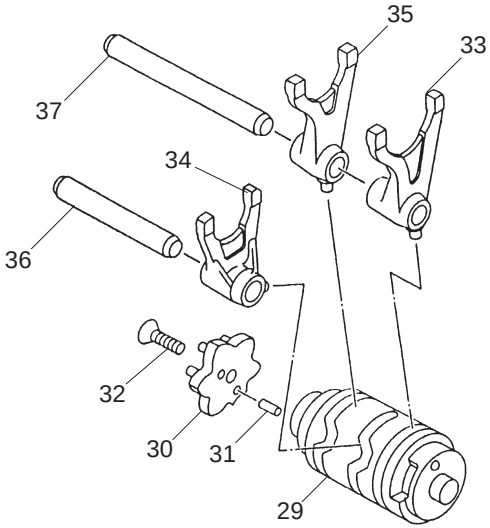

# Transmission / Transmission / Transmisión

| POS. | QTS. | 125 SM | 125 END | FRANÇAIS | ENGLISH | ESPAÑOL |
|---|---|---|---|---|---|---|
| 25 | 1 | Y728 | Y728 | ROULEMENT | BEARING | RODAMIENTO |
| 26 | 1 | T729 | T729 | PIGNON SORTIE DE BOITE 14T | SPROCKET DRIVE 14T | PIÑON SALIDA DENTADO Z=14 |
| 27 | 1 | Y730 | Y730 | CLIP DE VERROUILLAGE | HOLDER SPROCKET | SOPORTE PIÑÓN |
| 28 | 2 | C409 | C409 | VIS CHC M6X10 | SCREW CHC M6X10 | TORNILLO M6X10 DIN 912 |
| 29 | 1 | Y731 | Y731 | BARRILLET DE SELECTION | SHIFT CAM ASSY | TAMBOR SELECTOR |
| 30 | 1 | Y732 | Y732 | ETOILE DE SELECTION | SEGMENT | ESTRELLA |
| 31 | 2 | Y733 | Y733 | PION | PIN DOWEL | PASADOR DE CLAVIJA |
| 32 | 1 | Y734 | Y734 | VIS | SCREW | TORNILLO M6 |
| 33 | 1 | Y735 | Y735 | FOURCHETTE DE SELECTION 1 | FORK SHIFT 1 | HORQUILLA DEL CAMBIO 1 |
| 34 | 1 | Y736 | Y736 | FOURCHETTE DE SELECTION 2 | FORK SHIFT 2 | HORQUILLA DEL CAMBIO 2 |
| 35 | 1 | Y737 | Y737 | FOURCHETTE DE SELECTION 3 | FORK SHIFT 3 | HORQUILLA DEL CAMBIO 3 |
| 36 | 1 | Y738 | Y738 | AXE DE FOURCHETTE | BAR SHIFT FORK GUIDE | EJE HORQ CAMBIO 1 |
| 37 | 1 | Y739 | Y739 | AXE DE FOURCHETTE | BAR SHIFT FORK GUIDE | EJE HORQ CAMBIO 2 |

# Ensemble allumage / Ignition system / Sistema de encendido

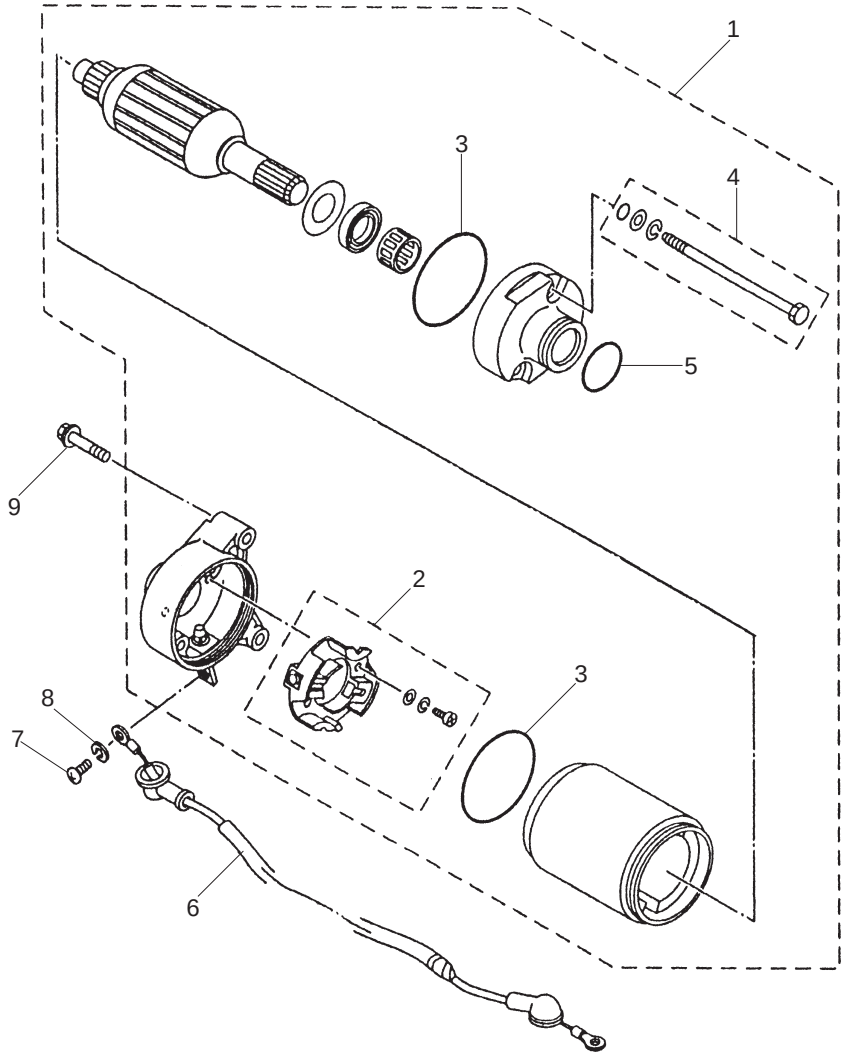

# Ensemble allumage / Ignition system / Sistema de encendido

| POS. | QTS. | 125 SM | 125 END | FRANÇAIS | ENGLISH | ESPAÑOL |
|---|---|---|---|---|---|---|
| 1 | 1 | Y753 | Y753 | DEMARREUR | STARTER | MOTOR ARRANQUE COMPLETO |
| 2 | 1 | Y754 | Y754 | CHARBON | STARTER COMP0NENTS | JUEGO DE ESCOBILLAS |
| 3 | 1 | Y755 | Y755 | JOINT TORIQUE | O-RING | ANILLO TÓRICO |
| 4 | 1 | Y756 | Y756 | KIT VIS | SCREW ASSY | CONJUNTO PERNOS MOTOR ARRAN. |
| 5 | 1 | Y757 | Y757 | JOINT TORIQUE | O-RING | ANILLO TÓRICO |
| 6 | 1 | Y758 | Y758 | CABLE ELECTRIQUE | ELECTRIC WIRE ASSEMBLY | CABLE COMPLETO |
| 7 | 1 | Y759 | Y759 | VIS CRUCIFORME | SCREW | TORNILLO FIJACIÓN CABLE |
| 8 | 1 | Y760 | Y760 | RONDELLE | WASHER | ARANDELA |
| 9 | 2 | Y761 | Y761 | VIS EPAULE | BOLT FLANGE | TORNILLO M6 |

# Spare part's book

**SHERCO** S.A.R.L.
<information@sherco-moto.com>
Fax : +34 93 865 56 91